Operation and Maintenance Manual

FSP250mm Dual Purpose Signalling Projector

Product Reference Number:

A4047 FSP250mm Signalling Projector
NSN 5850-99-799-7340

Manufacturers details:

Francis Searchlights Ltd
Union Road, Bolton
Lancashire, BL2 2HJ, UK
Tel: +44 (0) 1204 558960
Fax: +44 (0) 1204 558979
http://www.francis.co.uk
E-mail: sales@francis.co.uk

Distributor details:

Manual Part Number: C13863
Issue: 3

CONTENTS

1 - Introduction

2 - General Information

3 - Description

4 - illustrations

5 - Operation

6 - Maintenance

1 - Introduction

It is imperative that this manual is read carefully and understood before installing your equipment. For your future reference please keep this manual in a safe place.

Thank you for specifying a product from the Francis Searchlights range. All Francis products are designed to give complete customer satisfaction and are manufactured to the highest engineering standards in order to ensure optimum performance and service life.

The Francis FSP range combines features proven over many years service in the most hazardous conditions.

The 250mm Signalling Projector is an updated and improved version of the 10-inch SP, which it replaces. The principal differences between the two are that the 250mm SP has metric threads (for all threaded components except the grease nipples); uses non-ferrous materials for the barrel, shutter assembly etc., uses a tungsten-halogen lamp; and has a different cooling canopy arrangement.

In order to prolong the life and performance of your product, we recommend that you only specify Francis Searchlights spare parts. This will also ensure that any warranties on your equipment will not be invalidated. Information on spares ordering and parts is provided in this manual.

Should you ever need to contact Francis Searchlights Ltd. regarding your equipment, please quote the Product Serial Number at all times.

Back To Top

2 – General Information

Uses

1) The 250mm Signalling Projector (SP) can be used as a hand operated signalling projector or as a searchlight by locking the shutter open using the shutter stop pin assembly (4-2-34). When not in use the projector is protected by using a waterproof cover.

Dimensions and Weights

2) The dimensions and weights of the 250mm SP are as follows

   a) Dimensions: 760mm high x 590mm wide x 370mm deep.

   b) Weight: complete 33Kg (73lb).

   c) Weight, without supporting crutch and crutch base 19Kg (42lb).

Operating Details

3) Operating details of the 250mm SP are as follows:

a)	Lamp Life	600 hours
b)	Lamp	1300 watt tungsten halogen
c)	Divergence	6°
d)	Signalling range (max.)	16Km (10 miles)
e)	Signalling rate (max.)	12 words per minute
f)	Training	10° across the bow
g)	Elevation	60°
h)	Depression	45°

Cable, Connector and Switch box

4) The 250mm SP is supplied without cable. An appropriate length of 3 core cable and a connector is to be fitted on installation so that the SP may be plugged into a ship-mounted switch box. The switch box contains a two-pole isolating switch. Details of the cable, connector and switch box normally used are as follows:

a)	Cable	NSN 6145-01-202-0664
b)	Connector	NSN 5935-00-325-0469
c)	Switch box	NSN 5999-00-935-2312

Power Supply

5) The standard 250mm SP requires a 115v, 60 Hz, single-phase power supply, protected at 15A. A lamp is also available for operation on a 220v, 60 Hz, single phase power supply.

Mounting

6) The 250mm SP is normally mounted on a vertical pedestal, which is fitted to the ship's structure and fits into the crutch base (4-2-40) of the SP.

Nameplate and Warning Plate

6) A nameplate is mounted on the side of the Projector's barrel opposite the signalling lever. It shows the manufacturers name, the serial number of the SP, the year of manufacture, and the contract number. A warning plate is mounted on the dome assembly.

Nameplate

Warning Plate

Back To Top

3 - Description

Barrel and Covers

The projector consists of a cylindrical barrel (4-2-2) with a cover at each end. The front cover is referred to as the front bezel assembly (4-2-3) and the rear cover is referred to as the dome assembly (4-2-4). Three swing bolt assemblies (4-2-18) secure each of these covers.

Front Bezel Assembly and Front Glass

The front bezel assembly (4-3) consists of a bezel (4-3-2) in which a flat glass (4-3-3) is secured by a retaining ring (4-3-7) and six screws (4-3-10). A channel-section gasket (4-3-4) is fitted to the glass. A rectangular-section neoprene gasket (4-3-6), fitted in a groove in the bezel, provides a seal between the barrel and the bezel assembly. The bezel's two upper tabs have open slots, so that the swing-bolts can be moved clear. The lower tab has a hole, so that the bezel assembly can be suspended from the lower swing-bolt.

Dome Assembly and Reflector

The dome assembly (4-4) consists of a domed cover in which a lead-backed glass reflector (4-4-14) is secured with three spring clip assemblies (4-4-8). Three rubber pads (4-4-7), one fitted around the reflector at each spring clip, cushion the reflector in the bezel. The gasket / seal (4-4-5), and the bezel's tabs, are similar to the corresponding items in the front bezel assembly.

Cooling Canopy and Vent Tubes

A finned cooling canopy (4-2-27) fitted at the top of the barrel, and vent tubes (4-2-8) fitted at the bottom, allow free air flow but restrict the passage of light.

Sight

An open sight, comprising a rear rubber eyepiece (4-2-10) and a ring front sight (4-2-16), is mounted on the top of the barrel.

Shutter Assembly and Signalling Lever

The shutter assembly (4-2-5 and Figure 4-6) is mounted inside the front of the barrel, behind the front glass, its seven vanes are operated by a central internal link. The third lowest shutter being connected by its shaft, which extends through a bush mounted on the side of the barrel, to a pinion (4-2-24). The pinion is turned, to operate the shutter, by the rack on the operating lever (4-2-22). The signalling handle (4-2-30) operates the signalling lever.

The signalling lever is mounted on an eccentric bush (See figure 4-7), which is mounted on the shaft of the shutter lever, pivot bracket assembly. This pivot bracket assembly is attached to the signalling lever mounting block (See figure 4-7 and 4-2-23) which is secured to the side of the barrel. The eccentric bush can be turned, and set at any one of six positions, to adjust the play between the rack on the signalling lever and the pinion on the shutter shaft.

The shutter is normally held closed by a spring (4-2-21) mounted between the signalling lever and the shutter stop bracket (4-2-28). The shutter can be locked open, to permit the projector to be used as a searchlight, by using the signalling handle to open the shutter and then inserting the shutter stop pin (4-2-34) through the hole in the pinion and into the shutter shaft bush.

The shutter stop assembly (4-2-29) limits the signalling lever's arc of travel. The stops in this assembly, mounted above and below the signalling lever, can be adjusted to set the correct open and closed position of the shutter.

A silicone rubber damping strip (4-6-5) is fitted along the upper edge of each shutter vane (with the exception of the top vane)

Lampholder Assembly

The lampholder assembly (4-2-6 and 4-8) is mounted inside the base of the barrel. As shown in 4-8, it is fitted with a hinged locking gate, secured by a swing-bolt, to lock the lamp in the holder. The power supply cable passes through a cable gland, which is part of the baseplate (4-2-5) of the lampholder assembly, and its three leads are secured to terminals.

The fixing holes in the barrel are slotted, so that the lampholder position can be adjusted for correct focus. The lampholder cover plate (4-8-24) prevents light leakage.

Barrel mounting arrangement

A sideplate (4-2-13) is attached to each side of the barrel, and attached to each siderplate is a horizontal trunnion. These trunnions are fitted in bearings in the support crutch (4-2-39), permitting elevation and depression of the barrel. A hand locking screw (4-2-32) on the support crutch locks the barrel at the required angle by bearing against the quadrant (4-2-15).

Handles

The rear handle (4-2-14), mounted on the right hand sideplate, is used for elevation and training of the barrel.

Two lifting handles (4-2-33), one mounted on each side of the support, facilitate carrying the projector.

Crutch base

The crutch base (4-2-40) has a vertical socket which fits the spigot of the mounting pedestal, permitting the barrel to be trained in the horizontal plane. A hand locking screw (4-2-41) on the crutch base locks the projector at the required angle of trainning.

Back To Top

4 – Illustrations

The purpose of the illustrated parts list is to assist supply and maintenance personnel in identifying, requisitioning and stocking replacement parts.

The illustrated part list includes an general assembly drawing and break down of the major assembly drawings.

4-1 250mm Signalling Projectors Dimensions

4-2 250mm Signalling Projector Item List

4-3 Front Bezel Assembly

4-4 Dome Assembly

4-5 Vent Tube Assembly

4-6 Shutter Assembly

4-7 Signalling Lever

4-8 Lampholder Assembly

4-9 Swing Bolt Assembly

4-1 250mm Signalling Projectors Dimensions

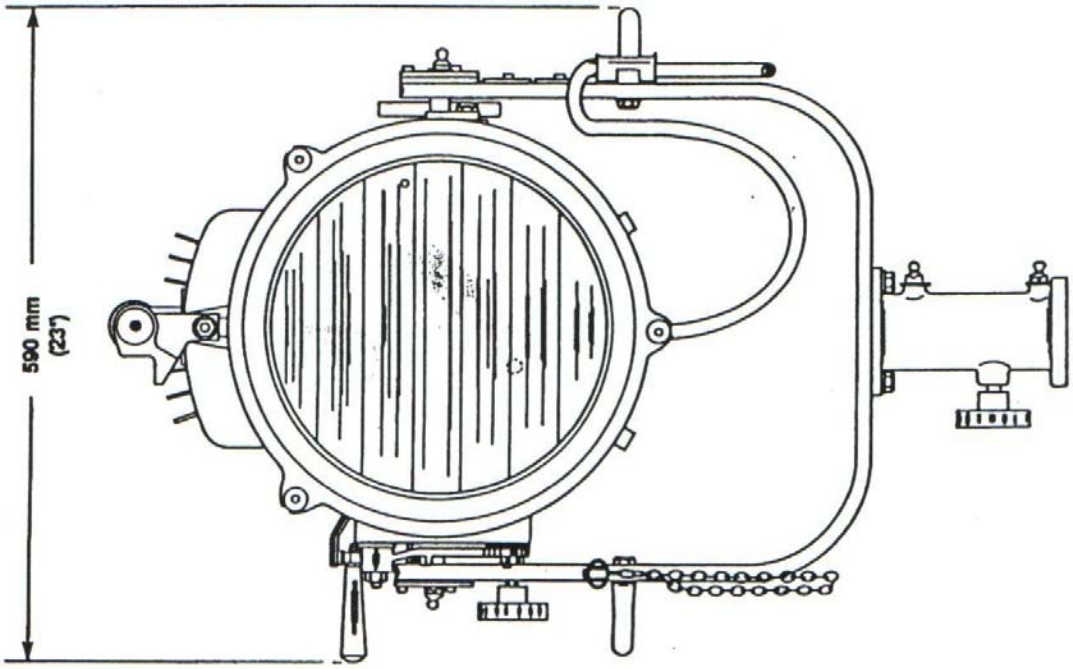

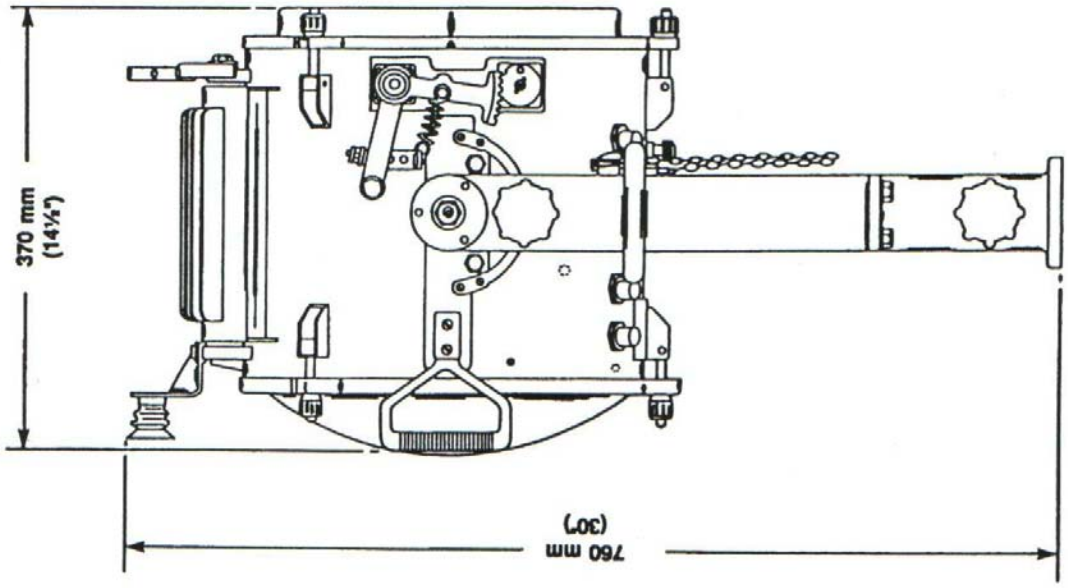

4-2 250mm Signalling Projector Item List

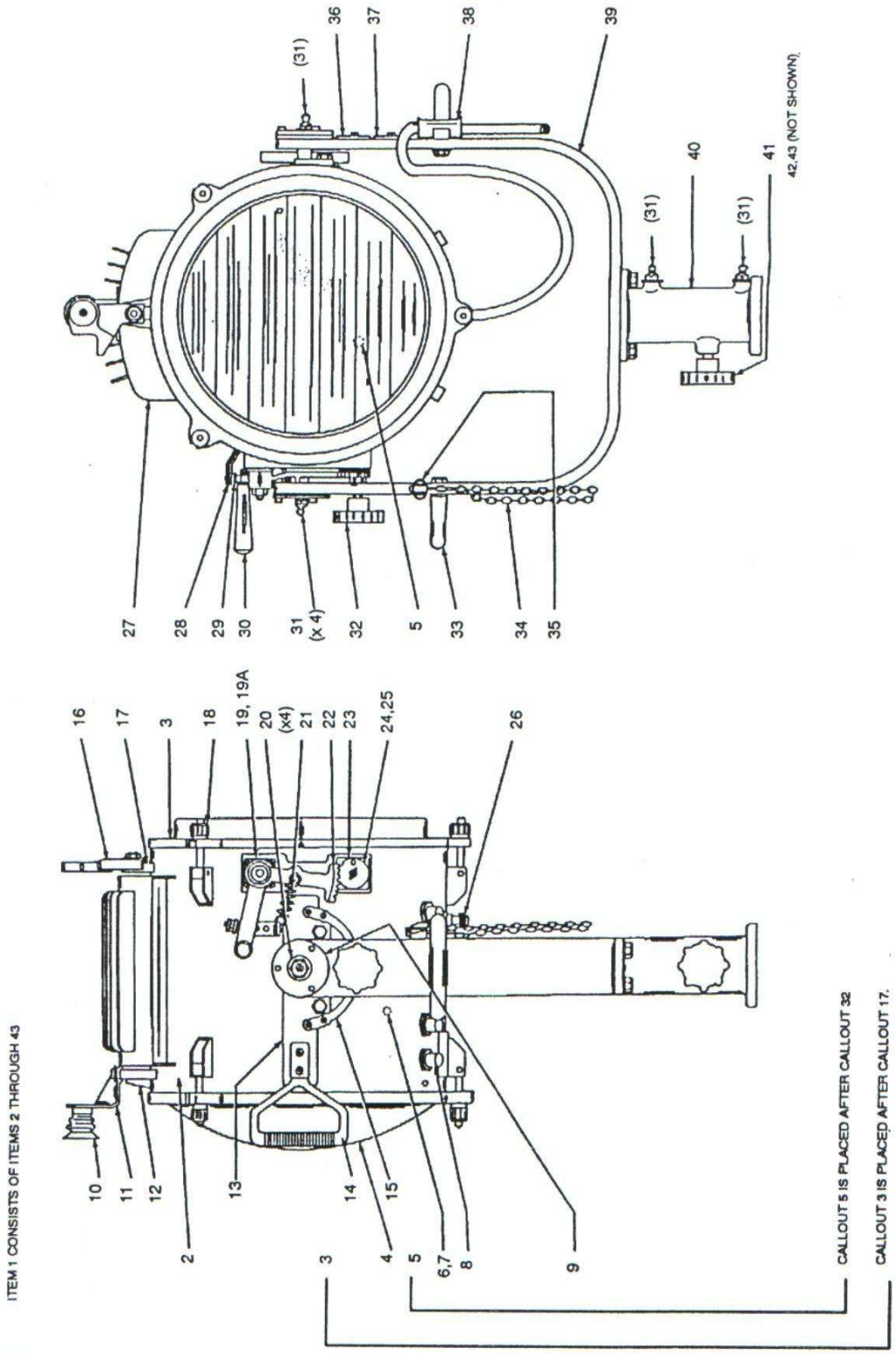

Index	Description	Dwg No	Part No	NSN	Qty
4-2-1	Signalling Projector	007 043 907	A4047	0558/5850-99-799-7340	1
4-2-2	Barrel Sub Assembly	007 043 909	C10405-17		1
4-2-3	Front Bezel Assembly	007 047 848	C10458-01		1
4-2-4	Dome Assembly	007 047 847	C10459-01	6230 99 616 7654	1
4-2-5	Shutter Assembly	007 046 669	C10374-01	5850-99-800-7384	1
	M5 x 16 Pan hd Screw		C10620-00		4
	M5 x 12 Pan hd Screw		C10206-00		4
	M5 Spring Washer		C09231-00		8
	M5 Plain Washer		C08392-00		8
4-2-6	Lampholder Assembly	007 046 649	C03317-01	6250 99 462 4144	1
4-2-7	Lamp 115v 1300w	X4050	D9893	6240 99 776 4364	1
4-2-7A	Lamp 220v 1300w	X4050	D9894	6240 99 776 4365	1
4-2-8	Vent Tube Assembly	007 046 673	C10426-01	5945 99 179 8009	1
4-2-9	Bearing Housing	007 044 001	C01301-37		1
4-2-10	Eyepiece	007 043 954	C01461-00	1240-99-924-3495	1
4-2-11	Rear Sight	007 043 933	C03067-17		1
	M6 x 16 Hex hd Screw		C08120-00		2
	M6 Spring Washer		C10554-00		2
	M6 Plain Washer		C06997-00		2
4-2-12	Rear Sight Bracket	007 043 932	C09409-17		1
	M6 x 10 Hex hd Screw		C08120-00		2
	M6 Plain Washer		C06997-00		2
	M6 Fibre Washer		C08003-00		2
4-2-13	Sideplate	007 043 937	C11101-17		2
	M10 x 25 Hex hd Screw		C10391-00		4
	M10 Plain Washer		C08091-00		4
	M10 Fibre		C10117-00		4
	M10 Full Nut		C08089-00		4
4-2-14	Rear Handle	007 043 956	C10429-17		1
	M6 x 10 Hex hd Screw		C08120-00		2
	M6 Spring Washer		C10554-00		2
	M6 Plain washer		C06997-00		2
4-2-15	Quadrant	007 043 948	C11231-37	6230 99 841 9333	1
	M5 x 12 Csk hd Screw		C10142-00		4
4-2-16	Front Sight	007 043 935	C03066-17		1
	M6 x 16 Hex hd Screw		C08120-00		1
	M6 Spring Washer		C10554-00		1
	M6 Plain Washer		C06997-00		1
4-2-17	Front Sight Bracket	007 043 934	C09399-17		1
	M6 x 12 Csk Screw		C10146-00		2
4-2-18	Swing Bolt Assembly Kit		C11844-01	5850 99 730 6959	6
	Swing Bolt Assembly	007 043 941	C10418-01		1
	Monobolt		C05293-00		10
	M5 x 16 Pan hd Screw		C10620-00		2
	M5 Spring Washer		C09231-00		2
	M5 Plain Washer		C08392-00		12
4-2-19	Shutter Lever, Pvt Bkt As	007 043 963	C09452-37		1
	M5 x 12 Csk hd Screw		C10142-00		4
4-2-19A	Eccentric Bush	007 043 961	C03226-37		1
	Dowel Peg	007 046 660	C06637-01		1
4-2-20	Nipple Disc Red	007 046 664	C11093-01		4
4-2-21	Shutter Spring	007 043 973	C02196-00	5360 99 462 4140	1
4-2-22	Operating Lever	007 043 958	C03068-17	3040 99 930 8536	1
	M10 Plain Washer		C08091-00		1
	M10 Lock Nut		C08090-00		2
4-2-23	Sig. Lever Mtg Block	007 043 957	C09361-17		1
	M5 x 10 Pan hd Screw		C09895-00		4
	M5 Plain Washer		C08392-00		4
	M5 Fibre Washer		C08391-00		4
	Sealant		C05294-00		A/R

Index	Description	Dwg No	Part No	NSN	Qty
4-2-24	Pinion	007 043 960	C02678-37	3020 99 282 4002	1
	Taper Pin		C16287-00		1
	M6 Plain Washer		C06997-00		1
4-2-25	Spindle Guide Bush	007 043 959	C03274-37		1
	M5 x 10 Ch hd Screw		C08410-00		4
4-2-26	Drain Plug	007 043 946	C11707-37	5365 99 974 4324	1
	Split Pin		C09214-00		1
4-2-27	Canopy Sub Assembly	007 046 683	C10414-01		1
4-2-28	Shutter Stop Bracket	007 043 962	C10425-17		1
	M5 x 16 Pan hd Screw		C10620-00		2
	M5 Spring Washer		C09231-00		2
	M5 Plain Washer		C08392-00		2
	M5 Full Nut		C08352-00		2
4-2-29	Shutter Stop Assembly	007 043 974	C10430-01	6230 99 052 3526	1
	M5 Spring Washer		C09231-00		2
	M5 Full Nut		C08352-00		2
4-2-30	Handle Assembly	007 043 966	C11233-17	5895 99 780 0850	1
	M10 Spring Washer		C15313-00		1
	M10 Lock Nut		C08090-00		1
4-2-31	Grease Nipple	007 046 680	C11094-00	0259/4730-99-801-1911	4
4-2-32	Side Lockwheel Assembly	007 046 667	C11221-17	5850 99 773 2176	1
4-2-33	Lifting Handle	007 043 955	C05013-17		2
	M6 x 20 Hex hd Screw		C06962-00		4
	M6 Spring Washer		C10554-00		4
	M6 Plain Washer		C06997-00		4
4-2-34	Shutter Stop Pin Assy	007 043 997	C11295-01	5315 99 877 1118	1
4-2-35	Retaining Clip	007 043 996	C05165-01		1
	M5 x 10 Pan hd Screw		C09895-00		1
4-2-36	Metrication Label	007 043 930	C10813-01		1
	M4 x 16 Pan hd Screw		C10136-00		2
	M4 Plain Washer		C04376-00		2
4-2-37	Modification Label	007 043 926	C05247-01		1
	M4 x 16 Pan hd Screw		C10136-00		2
	M4 Plain Washer		C04376-00		2
4-2-38	Cable Guide Assembly	007 043 951	C11095-17		1
4-2-39	Crutch Sub Assembly	007 043 910	C03286-17		1
	M12 Lock Nut		C06075-00		2
4-2-40	Crutch Base	007 043 911	C01321-17		1
	M10 x 25 Hex hd Screw		C10391-00		4
	M10 Plain Washer		C08091-00		4
4-2-41	Base Lockwheel Assy	007 043 917	C11220-17	5305 99 780 0858	1
4-2-42	Nameplate	007 043 929	C10428-00		1
	Monobolt		C05293-00		4
	M5 Plain Washer		C08392-00		4
4-2-43	Warning Label	007 043 927	C10155-01		1

4-3 Front Bezel Assembly

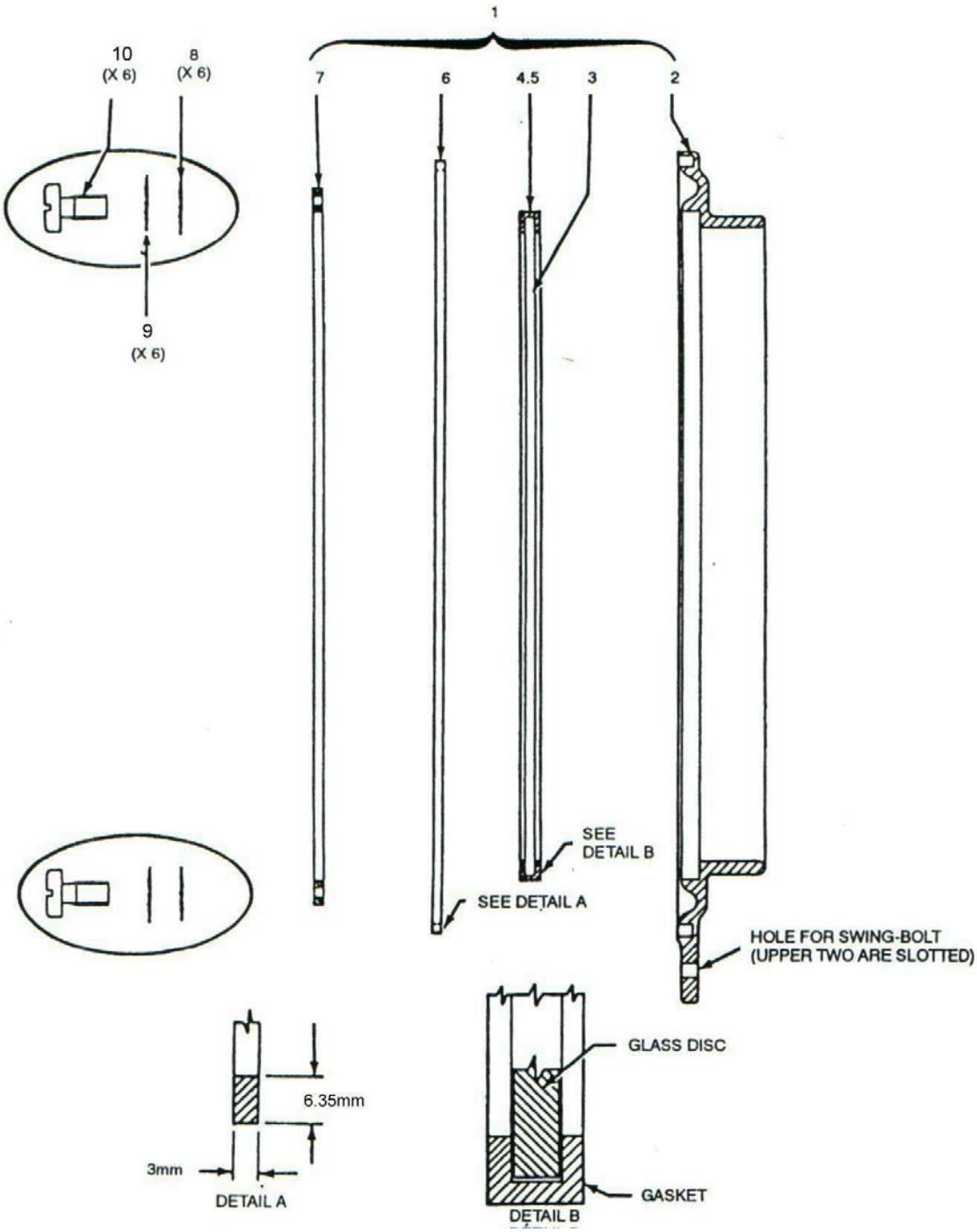

Index	Description	Dwg No	Part No	NSN	Qty
4-3-1	Front Bezel Assembly	007 047 848	C10458-01		1
4-3-2	Front Bezel	007 043 912	C02679-17		1
4-3-3	Front Glass	007 043 918	C01915-00	5850 99 773 2153	1
4-3-4	Front Glass Gasket	007 046 676	C15471-00	5330 99 139 7776	1
4-3-5	RTV Sealant		C12039-00	8040 21 870 7474	A/R
4-3-6	Front Seal	007 047 849	C11092-01	5330 99 701 4202	1
4-3-7	Gasket Retaining Ring	007 046 675	C02933-18		1
4-3-8	M5 Plain Washer		C08392-00		6
4-3-9	M5 Spring Washer		C09231-00		6
4-3-10	M5 x 10 Pan hd Screw		C09895-00		6

4-4 Dome Assembly

ITEM 1 CONSISTS OF ITEMS 2, 5, 3 x 7, 3 x 8 & 14

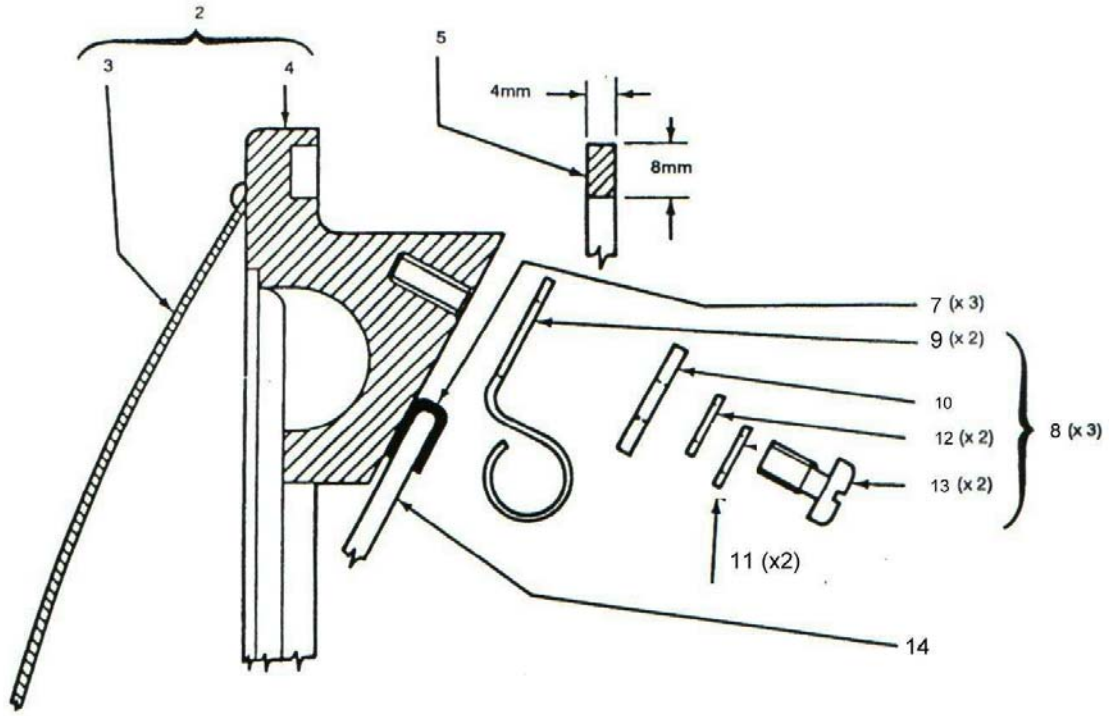

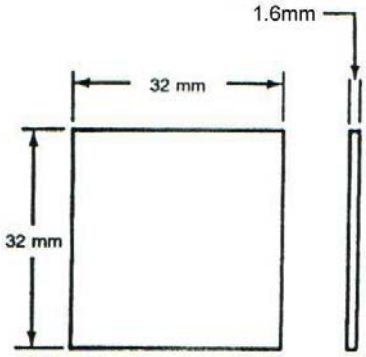

DETAIL OF ITEM 7

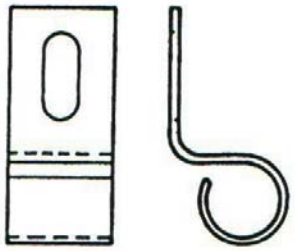

DETAIL OF ITEM 9

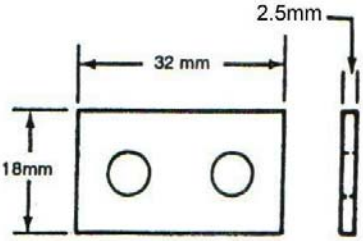

DETAIL OF ITEM 10

Index	Description	Dwg No	Part No	NSN	Qty
4-4-1	Dome Assembly	007 047 847	C10459-01	6230 99 616 7654	1
4-4-2	Rear Dome Sub Assy	007 043 916	C10460-17		1
4-4-3	Rear Dome	007 043 914	C10461-00		1
4-4-4	Rear Dome Bezel	007 043 915	C10462-01		1
4-4-5	Dome Seal	007 046 682	C11300-01	5330 99 945 1028	1
4-4-6	RTV Sealant		C12039-00	8040 21 870 7474	A/R
4-4-7	Rubber Pad	007 046 678	C03283-00	5850 99 773 2155	3
4-4-8	Mirror Clip Assembly	007 044 004	C11235-01		3
4-4-9	Mirror Clip	007 044 006	C03284-37	5850 99 773 2172	2
4-4-10	Reinforcement	007 046 671	C11236-37		1
4-4-11	M5 Spring Washer		C09231-00		2
4-4-12	M5 Plain Washer		C08392-00		2
4-4-13	M5 x 12 Pan hd Screw		C10206-00		2
4-4-14	Reflector	007 046 674	C06614-00	0558 / 6230 99 462 4136	1

4-5 Vent Tube Assembly

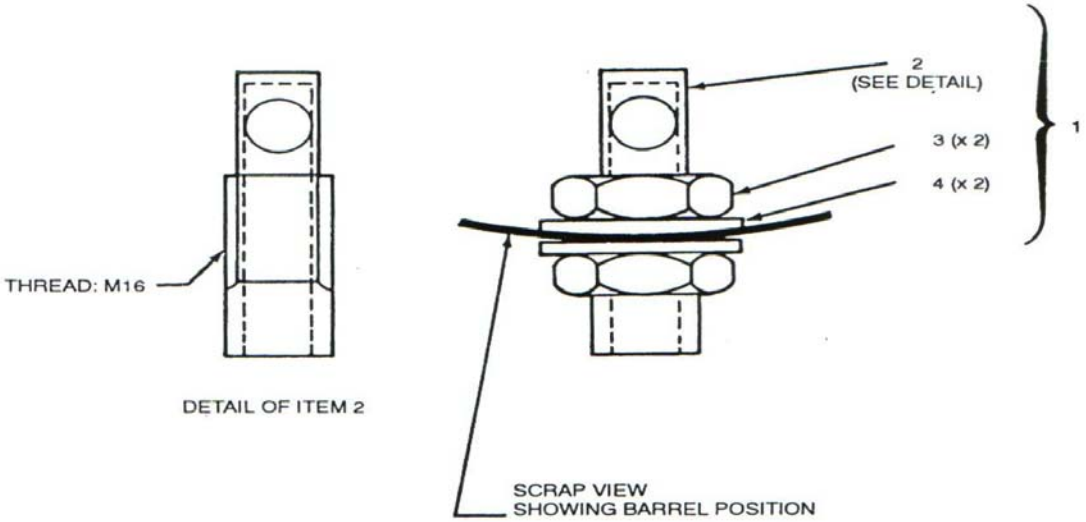

Index	Description	Dwg No	Part No	NSN	Qty
4-5-1	Vent Tube Assembly	007 046 673	C10426-01	5945 99 179 8009	10
4-5-2	Vent Tube	007 043 945	C10427-37		1
4-5-3	M16 Lock Nut		C10424-00		2
4-5-4	5/8” Fibre Washer		C10248-00		2

4-6 Shutter Assembly

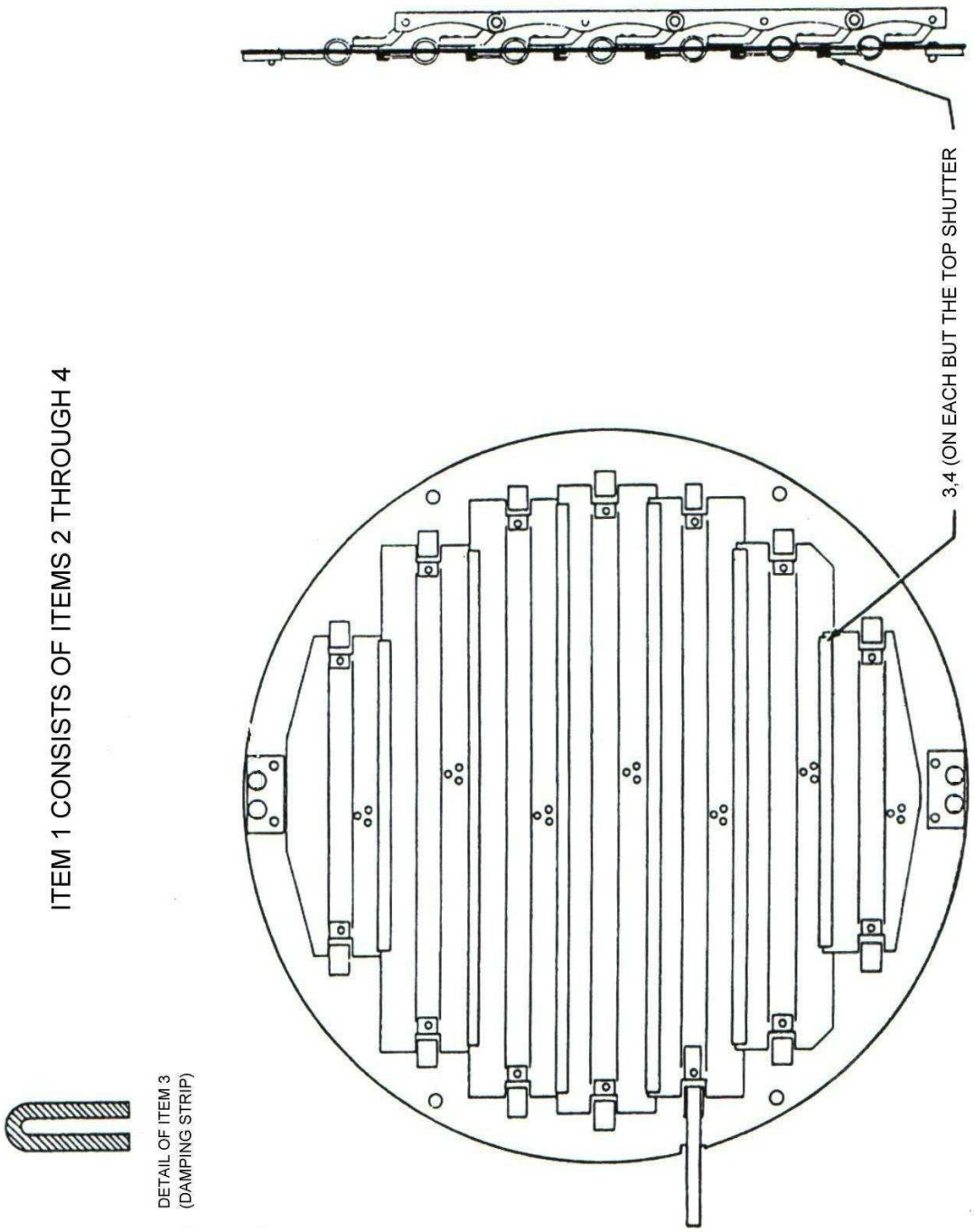

Index	Description	Dwg No	Part No	NSN	Qty
4-6-1	Shutter Assembly	007 046 669	C10374-01	5850 99 800 7384	1
4-6-2	M3 x 8 Csk hd Screw		C09521-00		4
4-6-3	Damping Strip	007 046 681	C11534-00	9230 99 588 0407	1
4-6-4	RTV Sealant		C12039-00	8040 21 870 7474	A/R

4-7 Signalling Lever

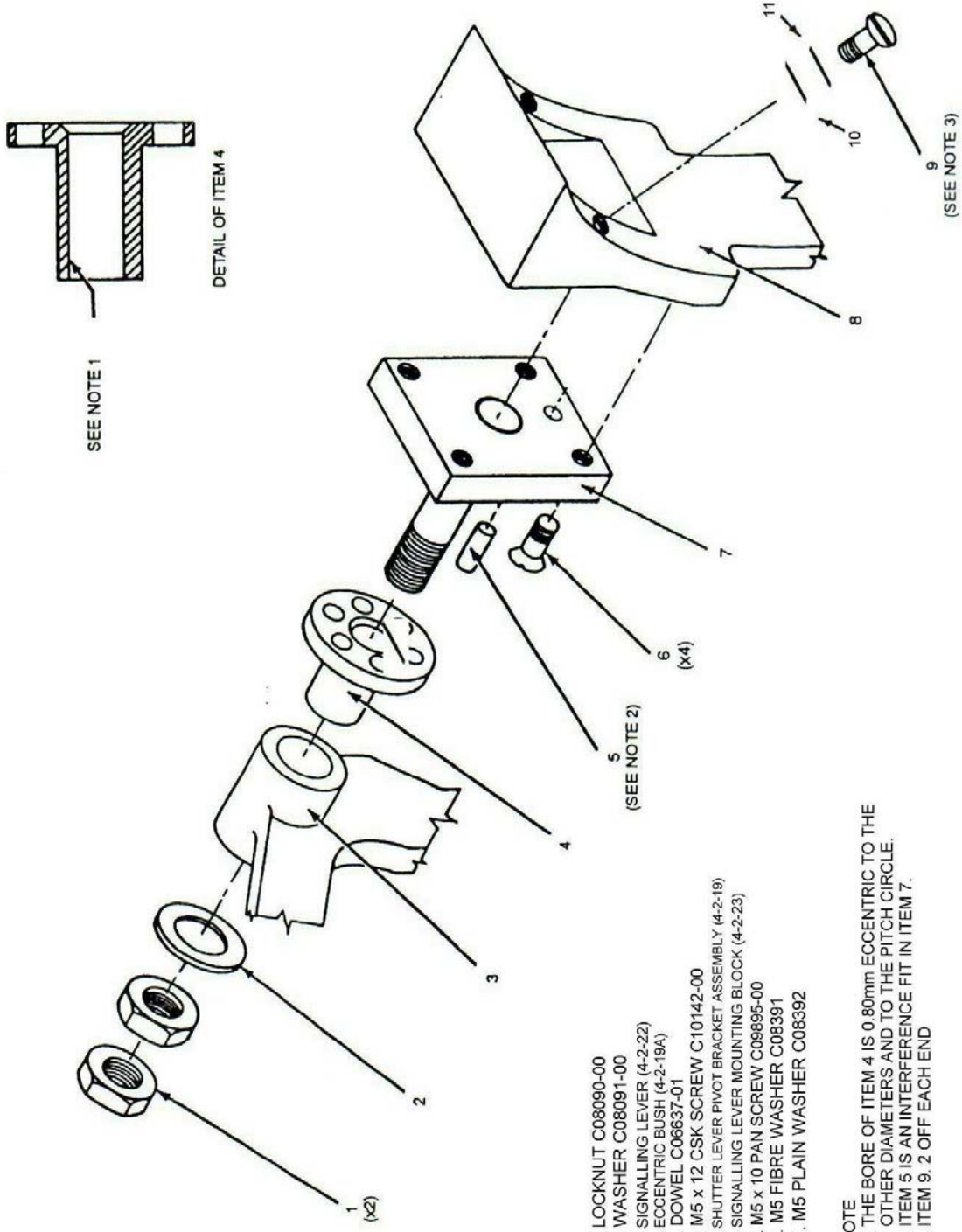

1. LOCKNUT C08090-00
2. WASHER C08091-00
3. SIGNALLING LEVER (4-2-22)
4. ECCENTRIC BUSH (4-2-19A)
5. DOWEL C08637-01
6. M5 x 12 CSK SCREW C10142-00
7. SHUTTER LEVER PIVOT BRACKET ASSEMBLY (4-2-19)
8. SIGNALLING LEVER MOUNTING BLOCK (4-2-23)
9. M5 x 10 PAN SCREW C09895-00
10. M5 FIBRE WASHER C08391
11. M5 PLAIN WASHER C08392

NOTE
1. THE BORE OF ITEM 4 IS 0.80mm ECCENTRIC TO THE OTHER DIAMETERS AND TO THE PITCH CIRCLE.
2. ITEM 5 IS AN INTERFERENCE FIT IN ITEM 7.
3. ITEM 9. 2 OFF EACH END

4-8 Lampholder Assembly

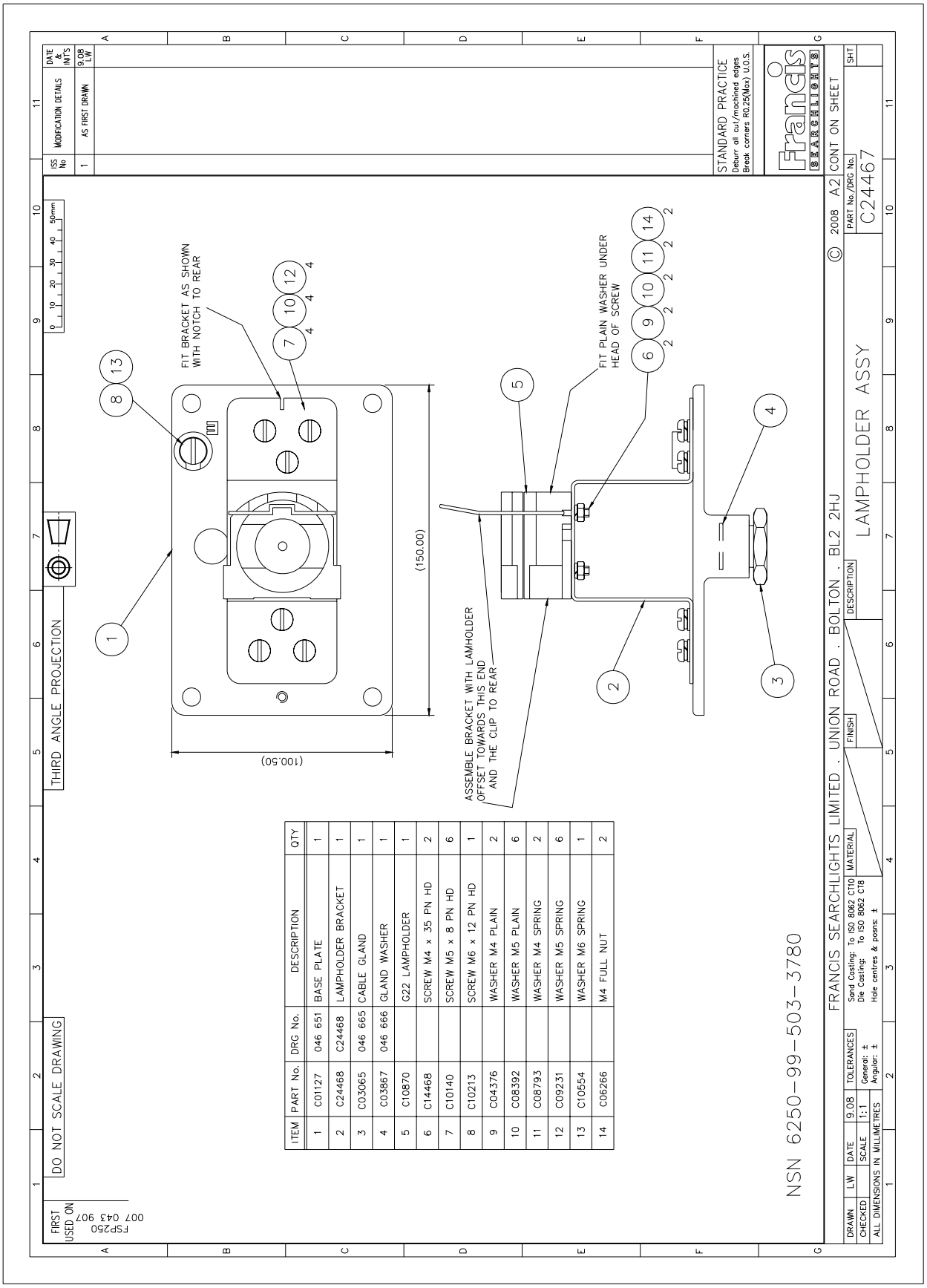

ITEM	PART No.	DRG No.	DESCRIPTION	QTY
1	C01127	046 651	BASE PLATE	1
2	C24468	C24468	LAMPHOLDER BRACKET	1
3	C03065	046 665	CABLE GLAND	1
4	C03867	046 666	GLAND WASHER	1
5	C10870		G22 LAMPHOLDER	1
6	C14468		SCREW M4 x 35 PN HD	2
7	C10140		SCREW M5 x 8 PN HD	6
8	C10213		SCREW M6 x 12 PN HD	1
9	C04376		WASHER M4 PLAIN	2
10	C08392		WASHER M5 PLAIN	6
11	C08793		WASHER M4 SPRING	2
12	C09231		WASHER M5 SPRING	6
13	C10554		WASHER M6 SPRING	1
14	C06266		M4 FULL NUT	2

4-9 Swing Bolt Assembly

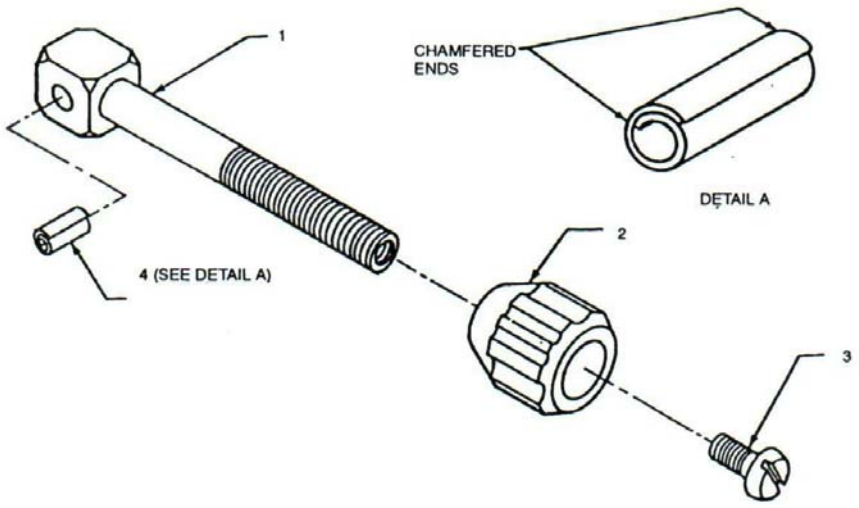

Index	Description	Dwg No	Part No	NSN	Qty
4-9-1	Shaft	007 043 942	C15436-37		1
4-9-2	Fluted nut	007 043 943	C08812-37		1
4-9-3	M5 x 6 Pan hd Screw		C15258-00		1
4-9-4	Roll Pin		C10052-00		1

Back To Top

5 - Operation

Preparation

Check that the 250mm Signalling Projector is plugged Into the Switch box and that the switch is set to ON.

Training and Elevation

Use the rear handle (4-2-14) to train and tilt the Projector. Use the base lockwheel (4-2-41) to fix the bearing and the side lockwheel (4-2-32) to fix the elevation. The projector can be trained through 360°, caution the Projector has no training stops. Do not train it through the inboard arc as this will damage the power supply cables. The Projector can be tilted between 60° elevation and 45° depression.

Sighting

Use the eyepiece (4-2-10) and the front sight (4-2-16) to aim the Projector.

Signalling

Press down the signalling handle (4-2-30) to open the shutter, and release it to close them.

Search

To use the Projector for searching, lock the shutter open by depressing the signalling handle and inserting the shutter stop pin (4-2-34) through the hole in the pinion and into the shutter shaft boss.

Protective Cover

After finishing with the Projector, switch it off, allow it to cool, and fit its protective cover.

Back To Top

6 - Maintenance

General

6-1 Operational maintenance consists of routine greasing and electrical checks. Corrective maintenance includes renewal of such items as the lamp, the front glass and its gasket, the reflector, the lampholder, the shutter assembly and the signalling lever.

6-2 Corrective maintenance actions included in this part cover the following components:

Front bezel assembly / dome assembly.

Front glass and bezel seal.

Reflector and dome seal.

Lamp.

Lampholder.

Shutter assembly.

Signalling lever.

Shutter damping strips.

Swing bolt

Operational Maintenance

6-3 To carry out operational maintenance, refer to 4-2 and proceed as follows:

Weekly checks.

6-3a Clean the reflector (4-4-14) with a wet chamois; check that the ten vent tubes (4-2-8) are clear, and check the freedom of all moving parts;

6-3b Check electrical connections and tighten as necessary, and check operation of the lamp.

Monthly checks

6-3c Check the shutter assembly (4-2-5) for freedom of movement.

6-3d Apply grease to the four grease nipples (4-2-31 one for each trunnion bearing, and two on the crutch support).

6-3e Unplug the Projector at the switch box and check that the insulation to ground of the lamp and the cable is 1 megohm or greater.

6-3f Check the condition of the cable at the entrance to the Projector and at the entrance to the switch box.

Front Bezel Assembly / Dome Assembly Removal and Replacement

6-4 The front bezel assembly (4-2-3) and the dome assembly (4-2-4) can each be removed completely, or suspended from its lower swing bolt.

6-5 To suspend either of these assemblies from its lower swing bolt, refer to figure 4-2 and proceed as follows.

6-5a Loosen the three swing bolt nuts and move the two upper swing bolts aside.

6-5b Move the assembly clear of the barrel, and lower it gently until it is suspended from its lower swing bolt.

6-6 To remove either of these assemblies completely, refer to 4-9 and 4-2 and proceed as follows:

6-6a Remove the retaining screw (4-9-3) from the lower swing bolt assembly and remove the swing bolt nut

6-6b Loosen the two upper swing bolt nuts and move the upper swing bolts clear of the bezel.

6-6c Gently remove the assembly from the barrel.

6-7 To replace the front bezel assembly or the dome assembly after it has been suspended from its lower swing bolt, position the assembly on the barrel, move the upper swing bolts into position, and tighten the three swing bolts evenly.

6-8 To replace the front bezel assembly or the dome assembly after it has been removed completely, proceed as follows:

6-8a Fit the dome assembly to the barrel of the Projector, with the lower swing bolt passing through the lower tab of the bezel. Move the two upper swing bolts into their slots and tighten the nuts so that they hold the bezel.

6-8b Fit the lower swing bolt nut onto its shaft, and fit the retaining screw.

6-8c Tighten the three swing bolt nuts evenly

Front Glass and Bezel Seal Removal and Replacement

6-9 To remove the front glass and bezel seal refer to 4-2 and 4-3 and proceed as follows:

6-9a Remove the front bezel assembly as outlined in 6-6.

6-9b Remove the six screws (4-3-10) and washers (4-3-8, 4-3-9) at the rear of the assembly, and remove the retaining ring (4-3-7).

6-9c Remove the front glass (4-3-3) and gasket (4-3-4) from the bezel.

6-9d Remove the bezel seal (4-3-6) from its groove in the bezel.

6-10 To replace the front glass, the front glass gasket, and the bezel seal, refer to figures 4-2 and 4-3, and proceed as follows:

6-10a Fit a new gasket to the front glass, using RTV sealant (4-3-5), and fit the glass / gasket into the bezel.

6-10b Fit the retaining ring, and secure it with the six screws and washers.

6-10c Fit a new bezel seal into its groove in the bezel.

6-10d Fit the front bezel assembly to the barrel of the Projector following the procedure outlined in 6-8.

Reflector and Dome Seal
Removal and Replacement

6-11 To remove the reflector and the dome seal, refer to figures 4-2 and 4-4 and proceed as follows:

6-11a Remove the dome assembly, following the procedure outlined in 6-6.

6-11b Remove the two screws (4-4-13) and washers (4-4-11, 4-4-12) from each of the three clip assemblies (4-4-8).

6-11c Carefully remove the reflector, the clip assemblies and rubber pads (4-4-7).

6-11d Remove the dome seal (4-4-5) from its groove in the bezel.

6-12 To replace the dome assembly, refer to figures 4-2 and 4-4, and proceed as follows:

6-12a Inspect each mirror clip (4-4-9) and pad (4-4-7). If necessary, fit new clips into each of the three clip assemblies. If necessary, fit new pads.

6-12b Fit the reflector into the bezel, with the three rubber pads and the three clip assemblies positioned, as indicated in 4-4, so that each pad and clip assembly aligns with one of the bezel's three mounting bosses.

6-12c Secure each clip assembly, using the screws and washers.

6-12d Fit a new dome seal into its groove in the bezel, using RTV sealant (4-4-6) and fit the dome assembly to the barrel, following the procedure outlined in 6-8.

Lamp
Removal and Replacement

6-13 To remove the lamp, refer to figure 4-8 and proceed as follows:

Caution – Since there is a possibility that the lamp will shatter, particularly if it is hot, gloves and safety goggles must be worn when changing a lamp.

6-13a Ensure that the power supply switch is set to OFF, and that the Projector's plug is disconnected from the switch box.

6-13b Remove the dome assembly following the procedure outlined in 6-5.

6-13c Loosen the nut (4-8-14) of the lampholder swing bolt assembly (4-8-13) and move the swing bolt aside.

6-13d Swing aside the clamp arm (4-8-12) and remove the lamp.

6-14 To fit a new lamp, refer to figure 4-8 and proceed as follows:

Caution – Dirt or grease will cause the lamp to overheat and fail prematurely. Clean gloves should therefore be worn when handling the lamp.

6-14a Install the lamp (4-2-7 for an Signalling Projector on a 115v power supply; 4-2-7A for an Signalling Projector on a 220v power supply.

6-14b Swing the clamp arm into position, swing the swing bolt into position, and tighten the nut until it is just snug.

6-14c Fit the dome assembly onto the barrel, following the procedure outlined in 6-7.

Lampholder
Removal and Replacement

6-15 To remove the lampholder, refer to figure 4-8 and proceed as follows:

6-15a Remove the lamp, following the procedure outlined in 6-13.

6-15b Disconnect the three supply leads from the terminals (fixings 4-8-5, 4-8-6).

Note – There are three of these screws in the assembly: the “ground” terminal is in the baseplate (4-8-7); “live” is in the contact support (4-8-18) and “neutral” is in the lamp bracket (4-8-21).

6-15c Loosen the cable gland nut (4-8-20) and remove the cable.

6-15d Remove the nut (4-8-30) and washers (4-8-26, 4-8-27) from each of the four screw (4-8-25) which secure the lampholder to the barrel, and remove the lampholder.

6-16 To replace the lampholder, refer to figure 4-8 and proceed as follows:

6-16a Assemble the lampholder, the lampholder cover plate (4-8-28), the barrel baseplate (4-8-29), the four screws and four washers, and secure this assembly in the barrel using the four nuts and the remaining four washers.

Note – The holes in the barrel are slotted to allow the focal position of the lampholder to be adjusted. Before tightening the nuts, ensure that the marks on the lampholder and the barrel line up.

6-16b Fit the power supply cable back through the gland, connect to the terminals (see note following 6-15) and tighten the gland nut.

6-16c Fit the lamp, and then the dome assembly, following the procedure outlined in 6-14.

Shutter Assembly
Removal and Replacement

6-17 To remove the shutter assembly, refer to figures 4-2 and 4-6 and proceed as follows:

6-17a Remove the front bezel assembly, following the procedure outlined in 6-5.

6-17b Disconnect the spring (4-2-21).

6-17c Drive out the taper pin which secures the pinion (4-2-24) to the shutter shaft and remove the pinion.

6-17d Remove the four screws which secure the shutter spindle guide bush assembly, and remove.

6-17e Remove the fixing screws and washers from the periphery of the shutter assembly.

6-17f Tilt the right hand side of the shutter assembly forward and remove the assembly to the right, aligning the pinion shaft so that it clears the hole in the barrel.

6-18 To replace the shutter assembly, refer to figures 4-2 and 4-6 and proceed as follows:

6-18a Reverse the procedure (outlined in 6-17) for removal.

Note – Ensure that the hole in the boss of the pinion aligns with the hole in the shaft when the shutter is in the OPEN position.

6-18b Check the operation and travel of the shutters. For fine adjustment, adjust the shutter lever stops (4-2-29) to give full closure and 90° opening of the shutters.

6-18c Fit the front bezel assembly, following the procedures outlined in 6-7.

Signalling Lever
Removal and Replacement

6-19 To remove the Signalling lever, refer to figures 4-7 and 4-2 and proceed as follows:

6-19a Remove the spring (4-2-21).

6-19b Remove the two locknuts (4-7-1) and the washer (4-7-2) from the lever pivot.

6-19c Remove the signalling lever (4-7-3, 4-2-22), noting the position of its rack relative to the pinion (4-2-24).

6-20 To replace the Signalling lever, refer to figures 4-7 and 4-2 and proceed as follows:

6-20a Place the signalling lever onto the eccentric bush (4-7-4), meshing the rack with the pinion.

6-20b If necessary, adjust the play between the rack and the pinion by adjusting the eccentric bush. To perform this adjustment, refer to figure 4-7, withdraw the eccentric bush from the mounting shaft, turn it to one of the six positions located by the dowel (4-7-5), and slide it back onto the eccentric bush.

6-20c When the correct adjustment has been achieved, replace the washer and the locknuts, and attach the spring.

6-20d Check shutter operation and travel, following the procedure outlined in 6-18b.

Shutter Damping Strips
Renewal

6-21 To renew the shutter damping strips, refer to figure 4-6 and proceed as follows:

6-21a Remove the shutter assembly, following the procedure outlined in 6-17.

6-21b Remove the old damping strips; clean the affected areas of each shutter; cut the damping strip material (4-6-3) into appropriate lengths; apply a thin coating of RTV sealant (4-6-4) to the inside of each new damping strip, and place the damping strip onto its shutter.

6-21c Allow at least one hour for the adhesive to cure before re-installing the shutter assembly.

Swing bolt
Renewal

6-22 To renew a swing bolt assembly, refer to figure 4-9 and proceed as follows:

6-22a Drive out the roll pin (4-9-4).

6-22b Fit components the swing bolt body, using a hammer to drive the roll pin into place.

Back To Top