User Instruction & Installation Manual

FX560
3 Kilowatt Xenon Searchlight

Product Reference Number:

A7079 – FX560D 3Kw 240v 1 Phase 50/60Hz
A7081 – FX560DP 3Kw 240v 1 Phase 50/60Hz
A7080 – FX560C 3Kw 240v 1 Phase 50/60Hz
A7082 – FX560CP 3Kw 240v 1 Phase 50/60Hz

Manufacturer's details:

Francis Searchlights Ltd
Union Road, Bolton
Lancashire, BL2 2HJ, UK
Tel: +44 (0) 1204 558960
Fax: +44 (0) 1204 558979
http://www.francis.co.uk
E-mail: sales@francis.co.uk

Distributor details:

Manual Part Number: C27528
Issue: 2 26.3.24

CONTENTS

1 - Introduction

2 - Safety Precautions

3 - Technical Information

4 - Unpacking and Installation Instructions

5 - Electrical Installation

6 - Operating Instructions

7 - Fault Finding

8 - Maintenance and Servicing

9 - General Assembly & Wiring Diagrams

10 - Spare Parts List

1 - Introduction

It is imperative that this manual is read carefully and understood before installing your equipment. For your future reference please keep this manual in a safe place.

Thank you for specifying a product from the Francis Searchlights range. All Francis products are designed to give complete customer satisfaction and are manufactured to the highest engineering standards in order to ensure optimum performance and service life.

The Francis Xenon range combines features proven over many years service in the most hazardous conditions in both marine and land installations.

In order to prolong the life and performance of your product, we recommend that you only specify Francis Searchlights spare parts. This will also ensure that any warranties on your equipment will not be invalidated. Information on spares ordering and parts is provided in this manual.

Should you ever need to contact Francis Searchlights Ltd. regarding your equipment, please quote the Product Serial Number at all times.

Back To Top

2 - Safety Precautions

The following instructions must be adhered to, in order to ensure a safe working environment and the safety of the user.

Note: When unpacking or manoeuvring the searchlight into its fixing position, suitable lifting points must be used in order to prevent damage to the equipment or personal injury.

- Because of the high internal pressure within the lamp, there is a risk of explosion in either a hot or cold state;
- During operation this lamp emits intense UV radiation which is harmful to the eyes and skin. Suitable protection should be worn;
- The high luminance of the arc can cause severe damage to the eye if viewed directly. ALWAYS wear suitable protective goggles when viewing the lamp;
- Always use protective jackets supplied with the lamp;
- Should it be necessary to examine the lamp with the front bezel removed, always use a protective shield and wear goggles to ensure a safe working environment;
- Searchlights get hot. Never touch the unit when lit and always allow 15 to 20 minutes for cooling down after turning the searchlight off;
- Never place anything on or cover the searchlight when in use;
- Ensure the lamp has cooled sufficiently before removal;
- If undue force appears necessary to remove the lamp, the equipment should be inspected by a competent person or contact the manufacturer;
- When disposing of lamps there are several options available:
    - Return the lamp, via the supplier, to the lamp manufacturer in its complete packaging
    - Because of the cold internal pressure of the lamp is approximately 8 bar, the lamp must first be depressurized before disposal. Place the lamp, in its protective jacket, in a plastic bag and drop from a height of 1 to 2 metres onto a hard surface;
- XBO lamps do not contain materials which are harmful to the environment and thus are not subject to special waste disposal regulations;
- Due to the vast range of lamps available it may appear possible that more powerful lamps can be used in the equipment than for which it was designed. Even when the unit will physically accept a higher wattage lamp, this substitution is not recommended and is dangerous. This action will also void any warranties on the equipment.

Always refer to the lamp manufacturer's technical data when dealing with lamps.

Back To Top

3 - Technical Information

This product has been designed to operate in accordance with the product specification. The FX560 3000 watt searchlight has the following features:

- All marine grade materials and fixings;
- Electronic power supply unit;
- Parabolic glass reflector;
- Stove enamel painted;
- Full 360° horizontal rotation;
- Vertical movement 45° to -25°;
- Internal self-regulating heater.

The searchlight also performs to the following optical data:

- Xenon light source;
- Lamp Wattage - 3000 Watts;
- Supply voltage – 220/240V;
- Peak Beam Candlepower – 175 Million lux;
- Range – 13,251 metres;
- Divergence - 1.5°;
- Temperature range: -50°C;

In order that the searchlight operates correctly it is imperative that competent personnel are responsible for the installation, operation and servicing of this equipment. Failure to adhere to this advice may cause premature failure or incorrect operation of the searchlight, which may damage the equipment or cause personal injury.

Technical information on the Irem Power Supply Unit and Ignitor are included overleaf. For more detailed information please contact the manufacturer.

PSU ref:	Model EX-100D/1
Ignitor ref:	AS16040A

Technical characteristics

Ordering code	00811005
Max. output power [W]	3400
Lamp capacity [W]	1000 to 3000
Nominal voltage [VAC]	230, 1Ph+N+PE (2Ph+PE)
Input voltage range [VAC]	185-265
Input frequency [Hz]	50/60
Input frequency range [Hz]	47-63
Max. input current [A]	22
Power factor corrector	provided
DC output current range [A]	40-110
DC voltage range [V]	15-34
DC max. output voltage at 110A [V]	31
No-load voltage [VDC]	130
No-load voltage rising time [s]	< 0.35
Max. output current supplied by no-load voltage [mA]	200
0-10V signal bandwidth [Hz]	1-30
Ripple [%]	<1.5
Efficiency	≥0.83
Control system	DSPs
Output overload protection	electronic programmable power limit
Lamp striking	soft-start ignition current
Input circuit protection	fuse
Input extra voltage protection	provided
Output current stabilisation	provided
Synoptic panel	LCD displaying: current, rated power, voltage unit internal temperature, operation hours (in total), operation hours (for each lamp)
ON/OFF	control keyboard, external switch, serial line
Lamp current adjustment	keyboard, 0-10V signal, serial line
Remote control	RS232 serial line - baud rate: 9600, parity: none data bit: 8, communication protocol: IREM
Output signals [dry contacts]	lamp ON, alarms ON
Input signals	0-10V signal, emergency, ON/OFF remote, stand-by mode
Operating temperature [°C]	-5 to +45
Storage temperature [°C]	-20 to +60
Degree of protection	IP20
CE conformity	Directives 2006/95/EC (LVD) and 2004/108/EC (EMC)
Isolation class	CL1
Cooling system	forced
Dimensions [mm]	440x400x132.5
Weight [kg]	19.5
Mounting position	horizontal / vertical / rack

AS series

Introduction

These igniters are expressly designed to strike Xenon, Xenon-Mercury, Mercury, Metal Halide and similar arc lamps. They produce the high voltage, high frequency starting potential required to get the gas in the lamp to ionize and make the current flow possible.
The ***AS*** igniters meet the lamp manufacturers' recommendations to ensure immediate and correct ignition of the lamp when cold or in any cooling stage.
They should be installed close to the lamp (but thermally shielded from it); the high voltage lead must be as short as possible and carefully insulated to prevent corona loss and reduction of strike energy.
The ambient temperature must not exceed 60°C.
Some models are equipped with a built-in special function relay allowing automatically cycled or timed ignition. Also this relay prevents the igniter from striking when the lamp is ON or if the no-load voltage to the lamp is not correct. As far as the insulation class, this device can be considered Cl. II (as per IEC 536), but it must be grounded for interference suppression.

Block diagram

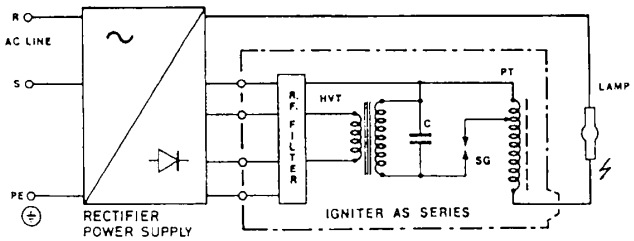

Outline drawing

AS-3040

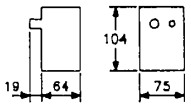

AS-8030

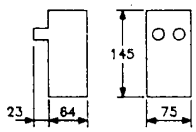

AS-16040/A

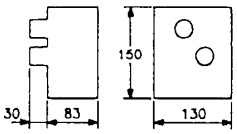

AS Series range

Models	AC input (50-60Hz) Volt	A during ignition	H.V. output KV	Lamp current A	Weight Kg.
AS-3040	230V	0.8	40	30	1.3
AS-8030	±10%	1.5	30	80	1.5
AS-16040A		3.8	40	160	3.5

The suffix 'A', used for the model AS-16040A, means that it has a built-in relay system for automatic or short timed ignition.

4 - Unpacking and Installation Instructions

The following instructions should be read and fully understood prior to installing the equipment to ensure that the correct procedures are followed, and all safety precautions are observed.

Note: If the equipment has been in storage for a considerable amount of time, it is advisable to conduct a routine maintenance check on all parts before installation.

Safety Precautions

This equipment should not be connected to an electrical supply before being installed. Installation procedures should be adhered to in order to ensure a safe working environment and reduce the risk of damage or personal injury.

Preparing the Mounting Position

Mark out and drill the fixing holes through the deck. Fit the ‘O’ ring in position and bolt the searchlight base securely. On an uneven surface it is necessary to use a suitable sealant, such as silicone in order to ensure a weatherproofed joint. If anti-vibration mounts are to be fitted, the fixing holes for the mounts should also be marked out and drilled. Prior to manoeuvring the searchlight into its’ fixing position, the AV mounts should be fitted to the base. When in the desired position, bolt the searchlight firmly down.

Back To Top

5 - Electrical Installation

For safety purposes, only competent personnel should perform the electrical installation. All equipment should be installed to current Electrical Regulations and Standards.

In order to obtain the maximum light output from the searchlight, it is essential that the full operating voltage of the lamp fitted be applied to the lampholder contacts.

Method of Electrical Connection

1) Disconnect the supply before working on the electrical system;
2) The searchlight must be connected to a fused electrical supply, using suitably sized cable;
3) If the searchlight is located a considerable distance from the mains supply, provision must be made in the cable size in order to overcome the voltage drop.

   The PSU should NOT be positioned any more than 5 meters away from the Searchlight with the standard 4 cores 16mm cable supplied, if this distance needs to be extended a larger cross-sectional cable will need to be fitted.

   The following table below indicates the maximum length of cable to be used for the AC supply cable.

Searchlight	1 phase 230v
Cable Size (mm²)	Distance Max
3 cores 2.5mm	27 MTRS
3 cores 4mm	43 MTRS
3 cores 6mm	65 MTRS
3 cores 10mm	114 MTRS
3 cores 16mm	174 MTRS

4) Whenever possible cable terminations should be made below deck and with approved terminal devices;
5) If a spare auxiliary fuse or circuit breaker is not available, one of the correct type and rating should be fitted and connected to a positive supply. It is advisable to locate a bus bar or main connection and avoid any direct connection to the supply:
6) For 220v AC products, the following colour coding system should be used for the customer supply cable:

   Brown - Live
   Blue - Negative
   Green/Yellow - Earth

Note: This equipment must be earthed.

Installation Guidelines

A typical installation and connection routine for the searchlight is as follows:

Referring to wiring diagram **C27527**, a supply is fed to the PSU, which then provides a common feed to all other functions and equipment.

Cables required to be connected by the customer: -
4 cores 16mm cable from the Searchlight to the PSU
3 cores 2.5mm cable from the Searchlight to the PSU
(Customer may need to provide a suitable junction box to extend these cables – 3 metres supplied).

The Mains cable to the PSU to be supplied by the customer
The searchlight head is pre-wired

Basic Operation

When the searchlight is switched on a supply is fed to the PSU and linked to the ignitor. Also, from the PSU, a dc output is fed to the lamp.
The ignitor ionises the gas within the lamp and this strikes the light.

Fitting instructions for the 3Kw xenon lamp

Referring to the diagram overleaf:

1) Unfasten the ten latches (**A**) on the front and rear of the searchlight;

2) Remove the front bezel (**B**) and rear bezel (**C**) assemblies;

3) Unscrew the two M6 hexagon screws (**D**) from the front lampholder mounting block (**E**) and remove the front lampholder assembly from the mounting bracket;

4) Loosen the knurled screw on the front (**F**)and rear (**G**) lampholder assembles;

5) Attach the **NEGATIVE (cathode)** end of the lamp to the lamp holder socket (**H**) which is supplied separately, using the M8 x 10 grub screw (**J**)

6) The lamp can now be inserted with the lamp holder socket into the lamp holder rear (**I**), The negative (cathode) end of the lamp is towards the rear of the searchlight;

7) On the rear lamp holder, tighten the knurled screw (**G**) onto the lamp holder socket (**I**) to hold the lamp in position;

8) Fasten the front lampholder mounting block back in position, it will be necessary to pull the front socket against its spring to fit over the lamp. When in place tighten the front knurled screw (**F**);

9) Fasten the front and rear lampholder leads as wiring diagram, ensuring the connections are secure;

10) The front bezel and rear bezel can now be replaced.

11) Removal is the reverse of the above.

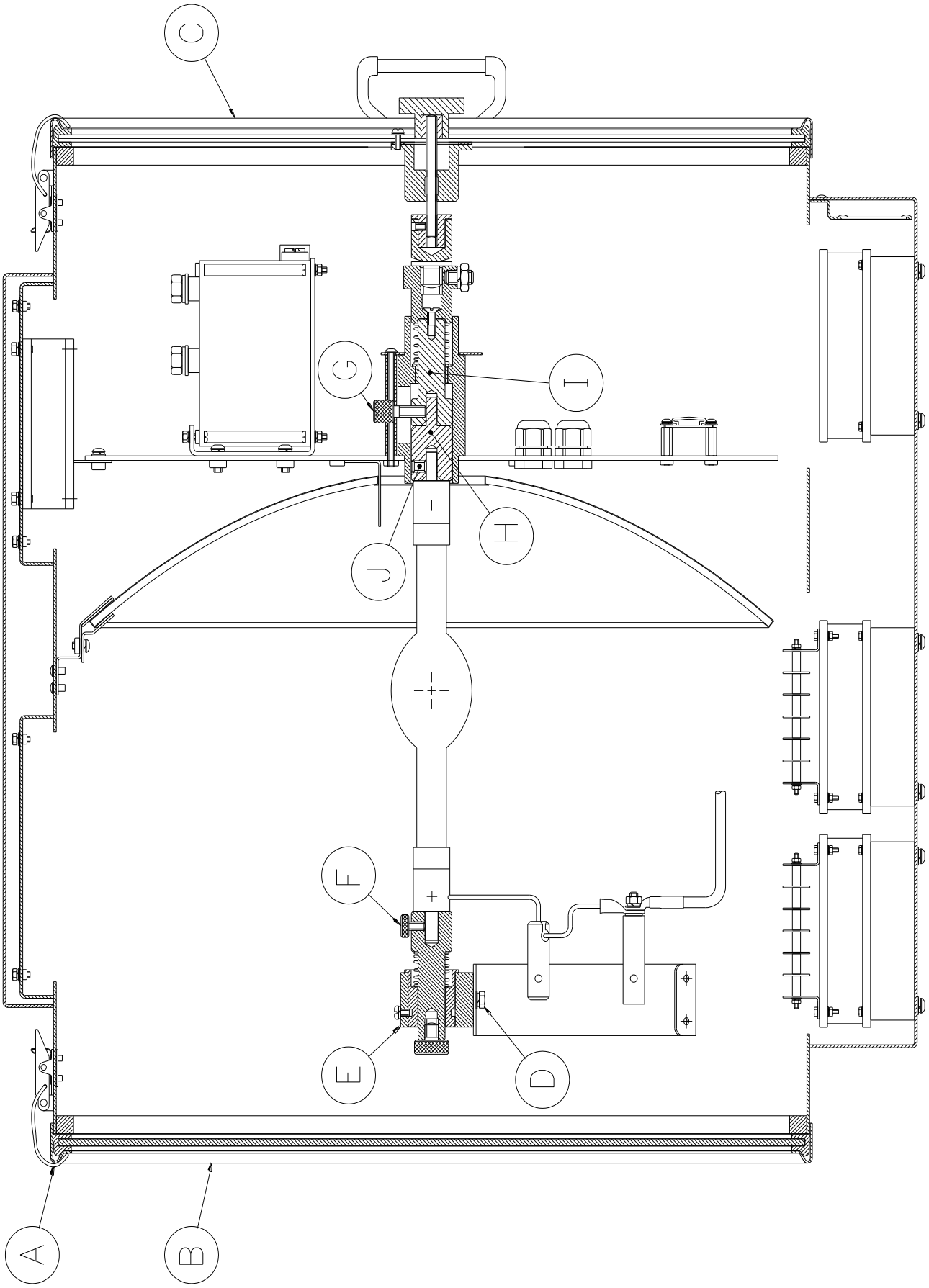

Back To Top

6 - Operating Instructions

This equipment is designed for use out of doors, in free air. Never place anything on, or cover, the searchlight when in use as this may present a hazard.

The PSU should be housed below deck/in doors. Never leave the PSU exposed to weather conditions.

The searchlight can be positioned using the elevation and base lockwheels. When in the desired position the lockwheels must be securely fastened to prevent damage.

The beam of the searchlight can be adjusted to give a variety of beam types. By turning the focus lockwheel positioned on the rear dome clockwise/anti-clockwise the lampholder mechanism moves through spot to flood positions. When in the desired beam is achieved simply release the lockwheel.

The heaters specified on this equipment are self-regulating and will shut off when they reach the dew point temperature.

This product should not be used for any purpose other than for which it was designed. Any modifications to the product should not be undertaken without consulting the manufacturer.

Setting to Work

Safe service in use necessitates the strict observance of the following precautions.

- Any article fabricated from quartz or glass is inherently fragile and care should therefore be taken, at all times, when handling lamps;
- Eye protection must be worn when handling lamps that have been removed from their packaging materials. The protective jacket should not be removed from the lamp for safety reasons, as there is a remote possibility of the lamp shattering violently, especially if it is subjected to mechanical shock or vibration;
- Ensure that the power rating of the Xenon lamp to be fitted is suitable for the lamphouse and power supply equipment (rectifier);
- Always isolate the equipment from the supply before inserting a lamp;
- Before inserting the lamp ensure that all contacts are clean. Contacts must be renewed at the slightest sign of corrosion. Sanding or filing down corroded areas is not recommended as this will only make the conducting surface between the pin and lampholder smaller, thus causing the lamp to overheat;
- The inert gas (Xenon) used in XBO lamps is under a pressure of several bar even when the bulb is cold. FOR SAFETY REASONS THE LAMP MAY ONLY BE INSERTED INTO THE LAMPHOUSE WITH THE PROTECTIVE JACKET FITTED;
- Do not twist or bend the fused quartz bulb when fitting the lamp as mechanical stresses MUST be avoided;
- Ensure that the spring contacts firmly surround the pins on the cap of the lamp. Do not apply unnecessary force when tightening the screws;
- After inserting the lamp, ensure that there is sufficient axial play in the lampholder. The lamp must be capable of unimpeded expansion when it warms up to operating temperature. Mechanical forces must not be applied to the fused quartz bulb;
- Electrical leads must be arranged in such a way that there is a sufficient air gap (approximately 40mm) between them and the lamphouse, in order to prevent flashovers from the ignition voltage. All flexible leads must have strain-relieving clamps;
- Before putting the lamp into service for the first time, check the polarity of the electrical connections. INCORRECT POLARITY WILL CAUSE IMMEDIATE DESTRUCTION OF THE LAMP;
- Before the protective jacket is removed, suitable protection must be worn i.e face mask and gloves with wrist protection;
- Never touch the quartz bulb with bare hands, as fingerprints will make the glass cloudy and cause a severe loss of light. This may also cause recrystallisation and thus weaken the bulb material. Should the bulb be inadvertently touched, remove fingerprints with methylated spirit and a clean, soft paper towel. The bulb should then be wiped with distilled water. NOTE: ALWAYS WEAR MASK AND GLOVES DURING CLEANING);
- All packaging and the protective jacket must be retained for re-use. Whenever removing a lamp, the protective jacket must always be used for safety reasons;

Notes:

1) XBO lamps are designed for dc operation only. The dc current may only be varied within the limits of the current control range. An XBO lamp operates best at rated current; over the life of the lamp, the current may be increased to its maximum value to compensate for loss of light. The output of the lamp can be reduced by operating the lamp at minimum current, but this does not prolong the life of the lamp;
2) For safety reasons, XBO lamps should be replaced once they reach the end of their average lamp life, and not later than 1.25 times their average lamp life. After this time there is an increased risk of the lamp exploding;
3) The anode (positive cap marked '+') must be on top when the lamp is inserted in the vertical position. If the anode is incorrectly inserted the arc will be unstable, the bulb will blacken more quickly, and the lamp will prematurely fail;
4) The HT lead from the high voltage terminal of the ignitor, must be connected to the cathode (negative cap marked '-'). If the lamp is connected with the wrong polarity it will be irreparably damaged after a very short time.
5) In all circumstances the lamp manufacturer's data should be referred to when dealing with lamps.

Back To Top

7- Fault Finding

All fault finding must be conducted by a competent person or qualified Electrical Engineer.

Please refer to the following table for the trouble-shooting of Xenon lamps.

Fault	Cause	Remedy
■ Wrong Polarity	■ Lamp incorrectly fitted ■ Faulty wiring	■ Anode (large electrode) must always be on top in vertical burning position ■ Check polarity, transpose connections if necessary
■ Cap overheated ■ Cap temperature above 230°C	■ Faulty contacts ■ Cooling equipment defective	■ Check terminals, tighten or renew ■ Check cooling equipment and replace if necessary
■ Arc unsteady	■ Lamp operated outside current control range ■ Magnetic stabilisation for horizontal operation defective	■ Correct current setting ■ Check magnetic stabilisation
■ Bulb draws in air	■ Crack in graded seal caused by overheated cap ■ Maximum cap temperature 230°C	■ Check terminals - tighten or renew
■ Glass erosion on fused quartz bulb	■ Lamp operated outside current control range ■ Lamp service life exceeded	■ Correct current setting ■ Check meter
■ Electrodes damaged ■ Premature blackening	■ Current ripple too high ■ Auxiliary mirror incorrectly adjusted	■ Have power supply inspected ■ Adjust auxiliary mirror
■ Asymmetrical blackening of lamp (in horizontal burning position)	■ Lamp operated too long in same position	■ Turn lamp through 180° after half service life

Failure of Lamp to Ignite

In the event of the xenon lamp failing to light the following steps should be taken:

1) Check that the mains supply is connected to the input of the PSU. On operating the switch, if the lamp does not light, switch off mains supply and check all fuses;
2) On pressing remote starting switch the lamp still does not ignite, check the searchlight head. On your command get an operator to activate the starting switch for approximately 10 seconds. During this time listen for any noise (cracking or hissing) coming from within the barrel. If this arcing is heard switch off the supply at the mains. Remove the rear bezel to expose the two supply leads to the xenon lamp. Using a dry cloth wipe these leads to remove any dust, moisture or condensation that may have formed around the inside of the barrel. Replace the rear bezel, ensuring the latches are securely fastened, and perform the check again, listening for the cracking. If the lamp still fails to ignite, switch off at the mains and replace the xenon lamp in accordance with the safety procedures within this manual and the manufacturer's information.

Any further tests to be carried out with regards to lamp failure must be conducted by a competent electrical engineer and should not be carried out in an explosive atmosphere.

3) Before a xenon lamp will ignite, the electrically insulated gas between the electrodes must be ionised. This is done by the ignitor which produces a high frequency voltage (up to 30,000 volts or higher). The ignitor is activated by switching the lamp on and a crackling or hissing noise should be heard. The ignitor is housed within the rear of the searchlight barrel. This is a totally encapsulated unit and repair is not advised. If found to be faulty a new ignitor must be fitted.

Back To Top

8 - Maintenance and Servicing

In order to prolong the service life and performance of your searchlight, the following maintenance guidelines are recommended:

- Maintenance checks should be conducted before every voyage or at least every three months;
- Before checking, disconnect the equipment from the supply;
- Visually inspect the condition of the equipment;
- Any major or minor structural damage should be rectified immediately in order to reduce sympathetic wear;
- After inspection it may be necessary to clean the inside of the searchlight. The following procedure should be adhered to:
    - Remove the front bezel;
    - Clean the front glass inside and out using a proprietary glass cleaner;
    - Clean the reflector if required;
    - Check the reflector mounting gaskets. If signs of corrosion or damage are evident, replace as necessary;
    - Ensure that the lampholder is free from corrosion or other damage;
    - Check earth point for conductivity;
- It is advisable to check all seals and gaskets for signs of degradation. Renew if necessary;
- Upon completing all maintenance requirements, the searchlight should be tested for full working order (approximately 20 minutes).
- Every six months the external movement mechanism i.e. lockwheels, elevation & pan mechanism should be lightly lubricated.

If in any doubt as to the correct servicing procedures to adopt please contact your distributor/agent or the manufacturer who will be able to advise the best course of action for your product.

Back To Top

9 – General Assembly & Wiring Diagrams

Drawing Number	Description
A7079	FX560D 3Kw G.A.
A7081	FX560DP 3Kw G.A.
A7080	FX560C 3Kw G.A.
A7082	FX560CP 3Kw G.A.
C27527	240v 3Kw 1 Phase Xenon Wiring Diagram

FIRST USED ON FX560D 3KW

DO NOT SCALE DRAWING

THIRD ANGLE PROJECTION

0 10 20 30 40 50mm

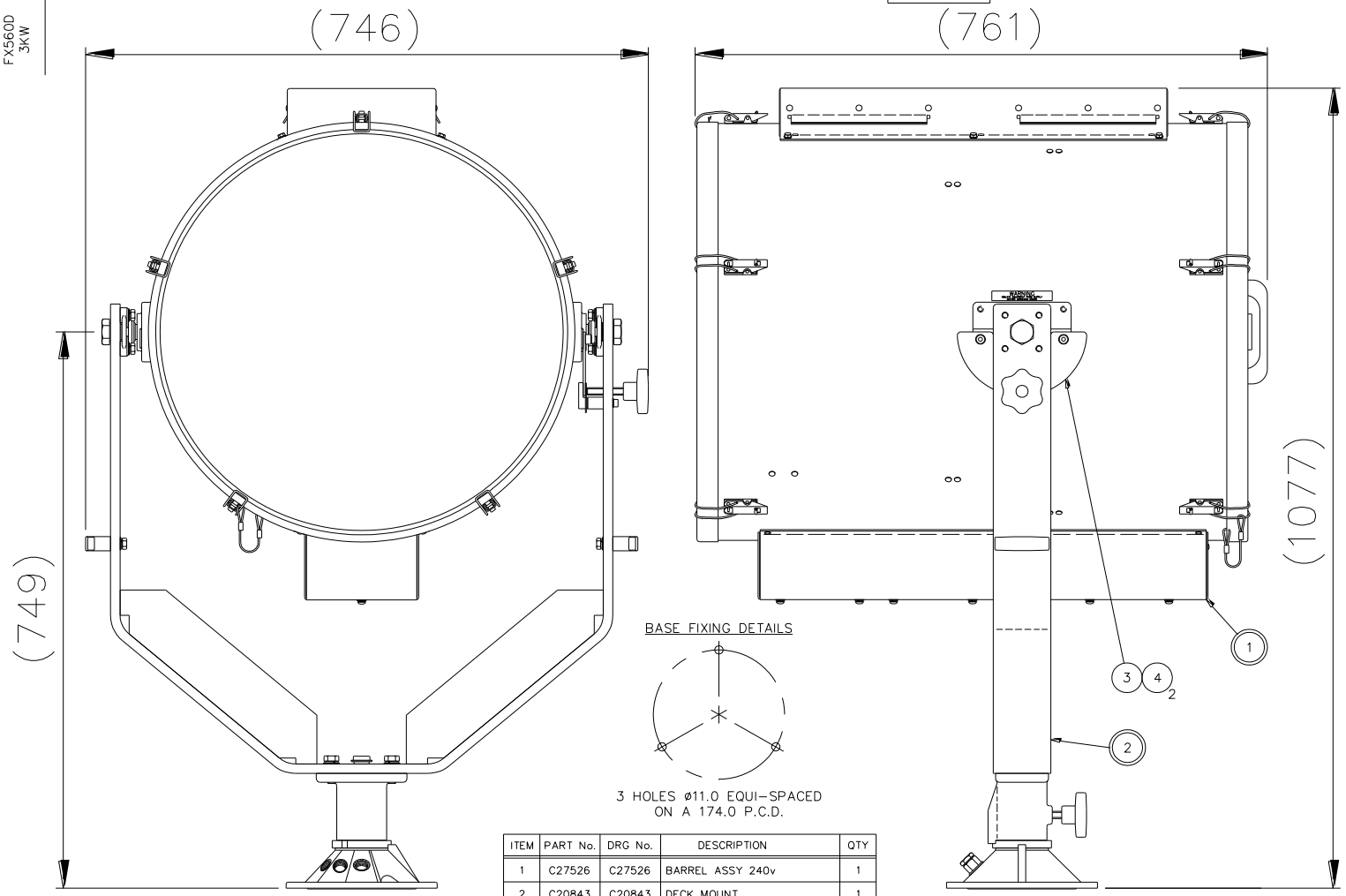

ISS No	MODIFICATION DETAILS	DATE & INIT'S
1	AS FIRST DRAWN	3.17 LW
2	1077 HEIGHT WAS 1067 (EC1713)	8.18 LW

ITEM	PART No.	DRG No.	DESCRIPTION	QTY
1	C27526	C27526	BARREL ASSY 240v	1
2	C20843	C20843	DECK MOUNT	1
3	C11380	X2863	QUADRANT	1
4	C13020		M8 x 10 SKT CAP HD SCREW	2

STANDARD PRACTICE
Deburr all cut/machined edges
Break corners R0.25(Max) U.O.S.

Francis SEARCHLIGHTS

FRANCIS SEARCHLIGHTS LIMITED . UNION ROAD . BOLTON . BL2 2HJ

© 2017

A2 CONT ON SHEET

DRAWN	LW	DATE	3.17	TOLERANCES	Sand Casting: To ISO 8062 CT10	MATERIAL	FINISH	DESCRIPTION	PART No./DRG No.	SHT
CHECKED		SCALE	1:4	General: ±	Die Casting: To ISO 8062 CT8			FX560D 3KW G.A.	A7079	1
ALL DIMENSIONS IN MILLIMETRES				Angular: ±	Hole centres & posns: ±					

FIRST USED ON FX560DP 3KW

DO NOT SCALE DRAWING

THIRD ANGLE PROJECTION

0 10 20 30 40 50mm

ITEM	PART No.	DRG No.	DESCRIPTION	QTY
1	C27526	C27526	BARREL ASSY 240v	1
2	C20848	C20848	DECK PEDESTAL MOUNT	1
3	C11380	X2863	QUADRANT	1
4	C13020		M8 x 10 CAP HD SCREW	2

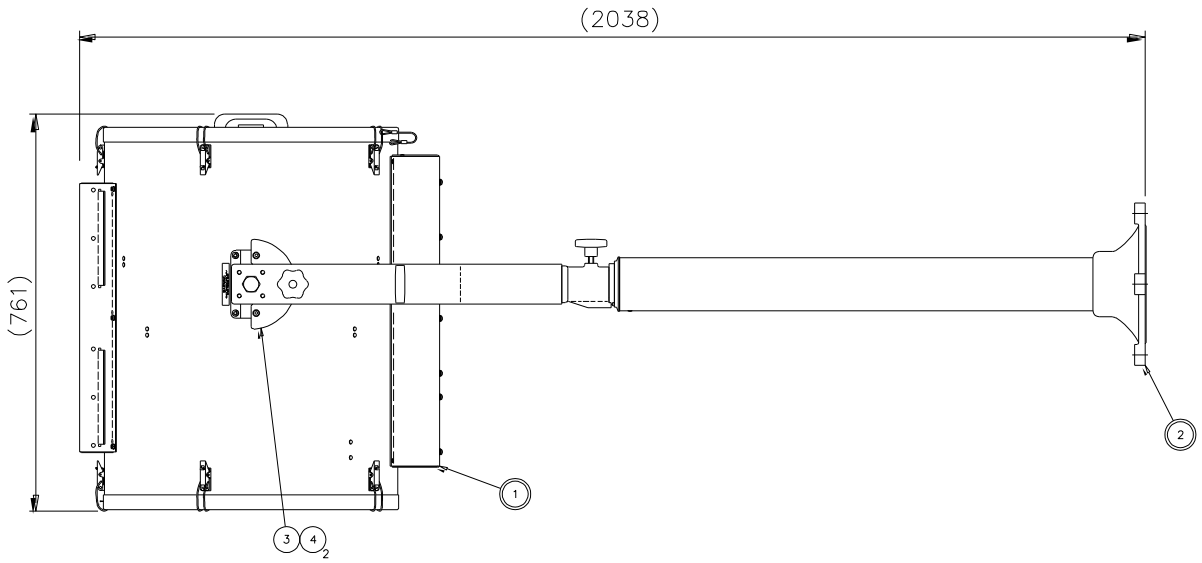

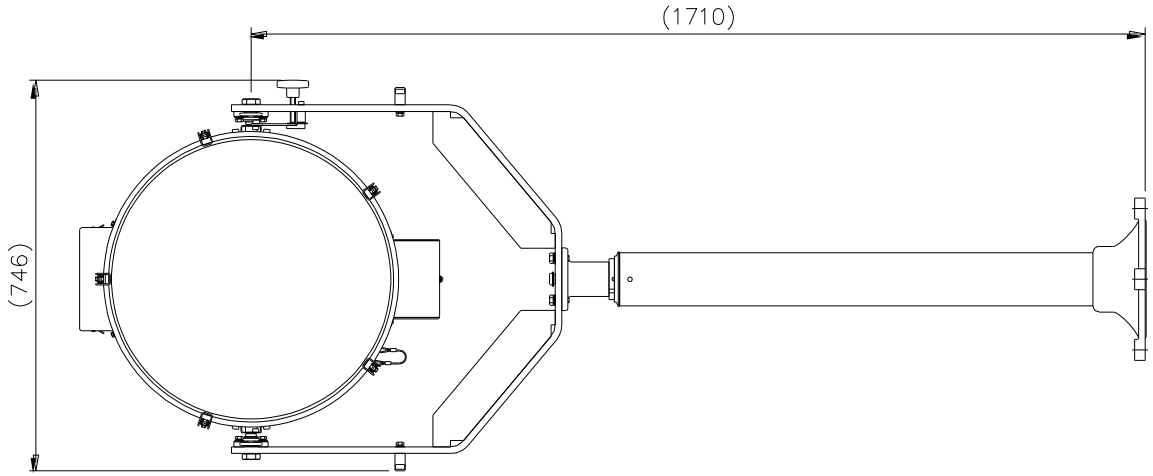

BASE FIXING DETAILS

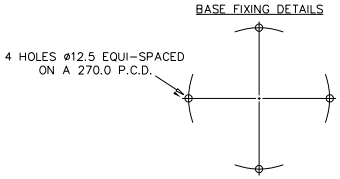

ISS No	MODIFICATION DETAILS	DATE & INIT'S
1	AS FIRST DRAWN	3.17 LW
2	2048 HEIGHT WAS 2038 (EC1713)	8.18 LW

STANDARD PRACTICE
Deburr all cut/machined edges
Break corners R0.25(Max) U.O.S.

Francis SEARCHLIGHTS

FRANCIS SEARCHLIGHTS LIMITED . UNION ROAD . BOLTON . BL2 2HJ

©2017

A1 CONT ON SHEET

DRAWN	LW	DATE	2017	TOLERANCES	Sand Casting: To ISO 8062 CT10	MATERIAL	FINISH	DESCRIPTION	PART No./DRG No.	SHT
CHECKED		SCALE	1:5	General: ±	Die Casting: To ISO 8062 CT8			FX560DP 3KW G.A.	A7081	1
ALL DIMENSIONS IN MILLIMETRES				Angular: ±	Hole centres & posns: ±					

FIRST USED ON FX560C 3KW

DO NOT SCALE DRAWING

THIRD ANGLE PROJECTION

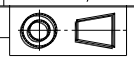

0 10 20 30 40 50mm

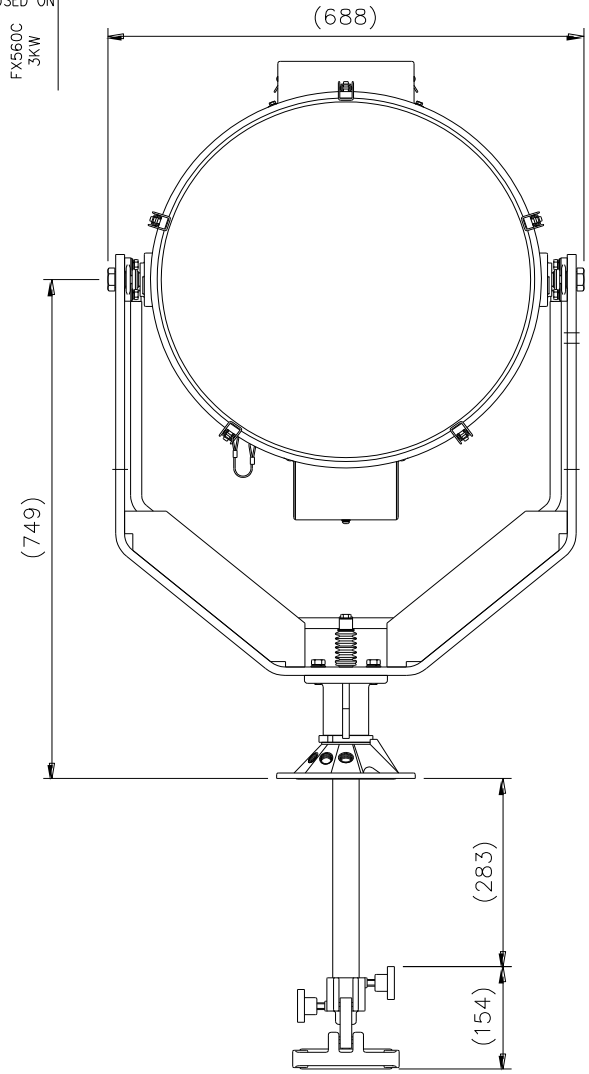

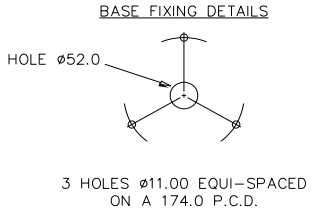

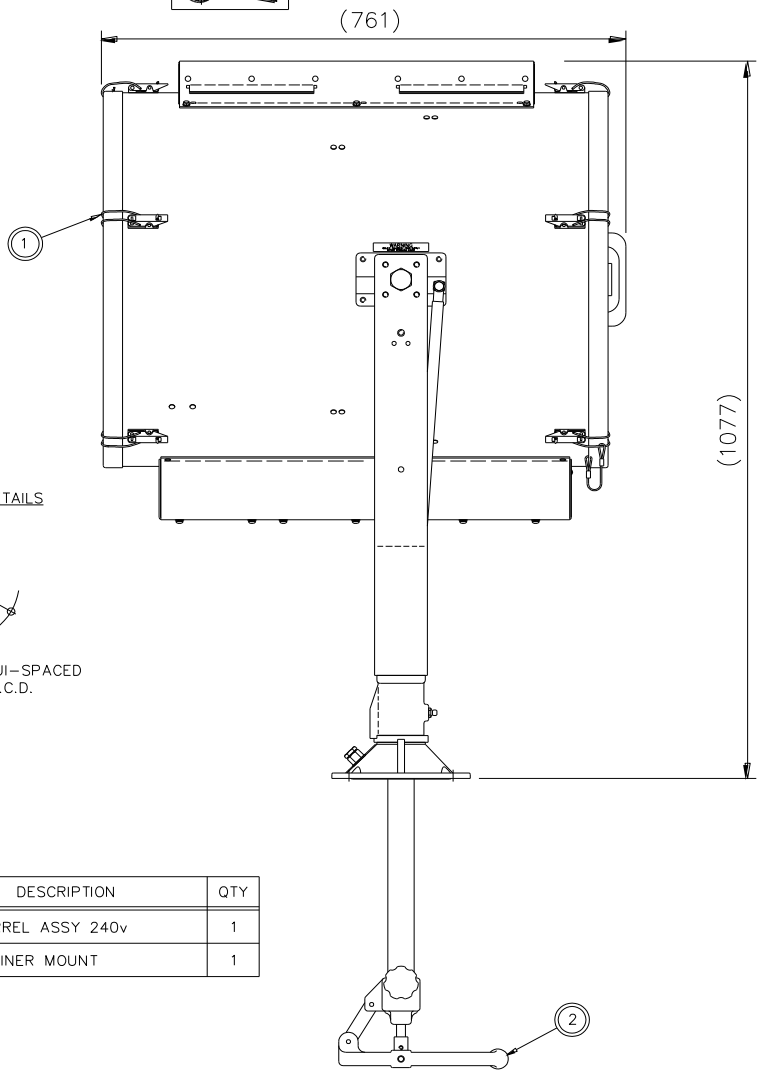

ITEM	PART No.	DRG No.	DESCRIPTION	QTY
1	C27526	C27526	BARREL ASSY 240v	1
2	C20849	C20849	TRAINER MOUNT	1

ISS No	MODIFICATION DETAILS	DATE & INIT'S
1	AS FIRST DRAWN	3.17 LW
2	1077 HEIGHT WAS 1067 (EC1713)	8.18 LW

STANDARD PRACTICE
Deburr all cut/machined edges
Break corners R0.25(Max) U.O.S.

Francis SEARCHLIGHTS

FRANCIS SEARCHLIGHTS LIMITED . UNION ROAD . BOLTON . BL2 2HJ

© 2017

A2 CONT ON SHEET

DRAWN	LW	DATE	3.17	TOLERANCES	MATERIAL	FINISH	DESCRIPTION	PART No./DRG No.	SHT
CHECKED		SCALE	1:5	General: ±			FX560C 3KW G.A.	A7080	1
ALL DIMENSIONS IN MILLIMETRES				Angular: ±					

Sand Casting: To ISO 8062 CT10
Die Casting: To ISO 8062 CT8
Hole centres & posns: ±

FIRST USED ON FX560CP 3KW

DO NOT SCALE DRAWING

THIRD ANGLE PROJECTION

0 10 20 30 40 50mm

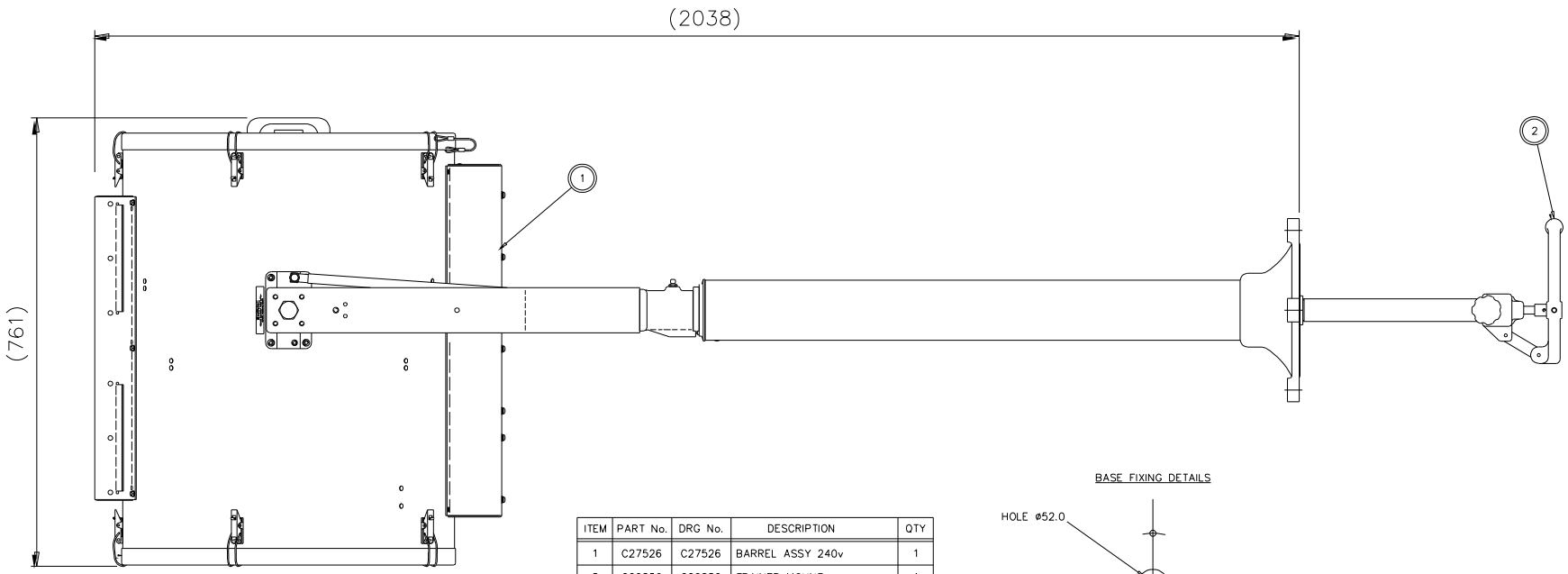

ITEM	PART No.	DRG No.	DESCRIPTION	QTY
1	C27526	C27526	BARREL ASSY 240v	1
2	C20850	C20850	TRAINER MOUNT	1

BASE FIXING DETAILS

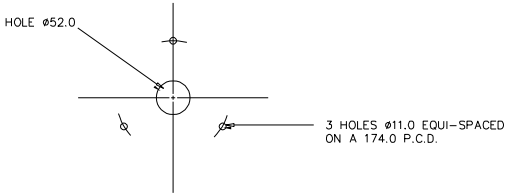

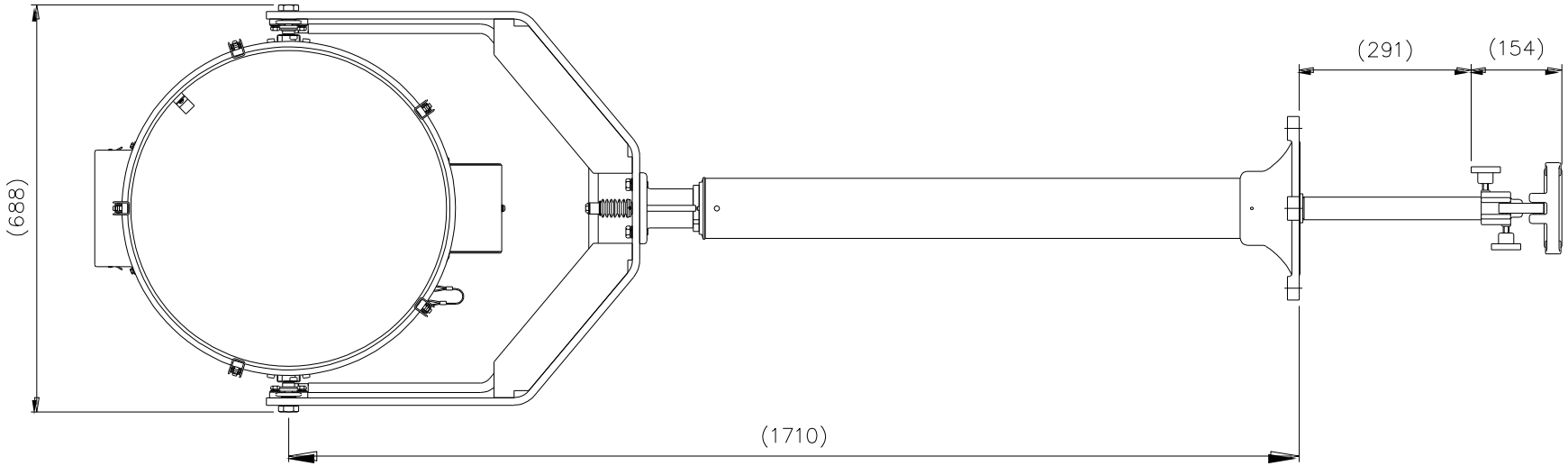

ISS No	MODIFICATION DETAILS	DATE & INIT'S
1	AS FIRST DRAWN	3.17 LW
2	2038 HEIGHT WAS 2028 (EC1713)	8.18 LW

STANDARD PRACTICE
Deburr all cut/machined edges
Break corners R0.25(Max) U.O.S.

Francis SEARCHLIGHTS

FRANCIS SEARCHLIGHTS LIMITED . UNION ROAD . BOLTON . BL2 2HJ

© 2017

A1 CONT ON SHEET

DRAWN	LW	DATE	3.17	TOLERANCES	MATERIAL	FINISH	DESCRIPTION	PART No./DRG No.	SHT
CHECKED		SCALE	1:4	General: ± Angular: ±			FX560CP 3KW G.A.	A7082	1

Sand Casting: To ISO 8062 CT10
Die Casting: To ISO 8062 CT8
Hole centres & posns: ±

ALL DIMENSIONS IN MILLIMETRES

FIRST USED ON A7079/82

DO NOT SCALE DRAWING

THIRD ANGLE PROJECTION

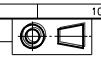

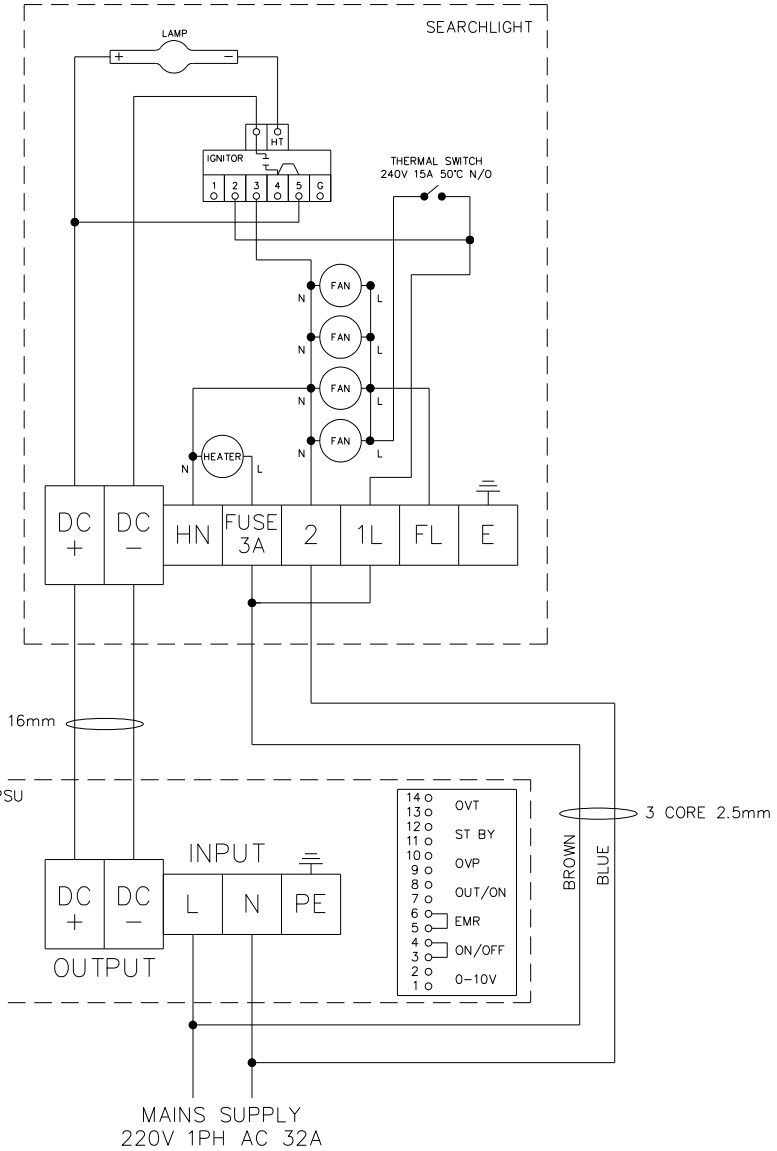

ISS No	MODIFICATION DETAILS	DATE & INIT'S
1	AS FIRST DRAWN	3.17 D.S.
2	ADDED FUSE TO CONTROL PANEL (EC1736)	12.18 L.W.

STANDARD PRACTICE
Deburr all cut/machined edges
Break corners R0.25(Max) U.O.S.

Francis SEARCHLIGHTS

FRANCIS SEARCHLIGHTS LIMITED . UNION ROAD . BOLTON . BL2 2HJ

©2017

A1 CONT ON SHEET

DRAWN	D.S.	DATE	23.3.17	TOLERANCES	Sand Casting: To ISO 8062 CT10	MATERIAL	FINISH	DESCRIPTION	WIRING DIAGRAM XENON 3KW 220V 1PH	PART No./DRG No.	SHT
CHECKED		SCALE		General: ±	Die Casting: To ISO 8062 CT8					C27527	1
ALL DIMENSIONS IN MILLIMETRES				Angular: ±	Hole centres & posns: ±						

10 - Spare Parts List

The following spare parts can be ordered directly from the manufacturer:

Part Number	Description
C27159-00	Power Supply Unit
C12081-00	Ignitor
C24597-00	Bottom Fan
C27203-01	Top Fan
D24177	3Kw Xenon Lamp
C20881-00	Front Glass
C27643-00	Front Glass Royal Blue (Optional)
C20569-00	Front/Rear Bezel Gasket
C26394-00	Thermostatic Switch
C06779-00	Reflector
C20281-00	Bellows (C & CP)
C21502-01	Base Lock Wheel Assembly (D & DP)
C21503-01	Side Lock Wheel Assembly (D & DP)
C16958-01	Tilt Lock Wheel Assembly (C & CP)
C11026-01	Pan Lock Wheel Assembly (C & CP)
C20839-01	Focus Wheel Assembly
C11148-00	Base ‘O’ Ring (D & C)
C10170-00	Pedestal ‘O’ Ring (DP & CP)
C08926-00	Push Rod Seal (C & CP)
C21967-00	Push Rod ‘O’ Ring (C & CP)

In order to prolong the life and performance of your product, we recommend that you only specify Francis Searchlights spare parts. This will ensure that any warranties on your equipment will not be invalidated.

When ordering spare parts please contact the Sales Department at Francis Searchlights Limited. Please quote searchlight model and serial number at all times. This will enable a fast response to your spares’ requirements.

Back To Top