User Instruction & Installation Manual

FX560 Remote Control
3-Kilowatt Xenon Searchlight

Product Reference Number:

A7225 – FX560RC 3Kw 240v 1 phase 50/60Hz

Manufacturer's details:

Francis Searchlights Ltd
Union Road, Bolton
Lancashire, BL2 2HJ, UK
Tel: +44 (0) 1204 558960
Fax: +44 (0) 1204 558979
http://www.francis.co.uk
E-mail: sales@francis.co.uk

Distributor details:

Manual Part Number: C28455
Issue: 3 18.3.20 EC1806

CONTENTS

1 - Introduction

2 - Safety Precautions

3 - Technical Information

4 - Unpacking and Installation Instructions

5 - Electrical Installation

6 - Operating Instructions

7 - Fault Finding

8 - Maintenance and Servicing

9 - General Assembly & Wiring Diagrams

10 - Spare Parts List

1 - Introduction

It is imperative that this manual is read carefully and understood before installing your equipment. For your future reference please keep this manual in a safe place.

Thank you for specifying a product from the Francis Searchlights range. All Francis products are designed to give complete customer satisfaction and are manufactured to the highest engineering standards to ensure optimum performance and service life.

The Francis Xenon range combines features proven over many years service in the most hazardous conditions in both marine and land installations.

To prolong the life and performance of your product, we recommend that you only specify Francis Searchlights spare parts. This will also ensure that any warranties on your equipment will not be invalidated. Information on spares ordering and parts is provided in this manual.

Should you ever need to contact Francis Searchlights Ltd. regarding your equipment, please always quote the Product Serial Number.

Back To Top

2 - Safety Precautions

The following instructions must be adhered to, to ensure a safe working environment and the safety of the user.

Note: When unpacking or manoeuvring the searchlight into its fixing position, suitable lifting points must be used to prevent damage to the equipment or personal injury.

- Because of the high internal pressure within the lamp, there is a risk of explosion in either a hot or cold state.
- During operation, this lamp emits intense UV radiation which is harmful to the eyes and skin. Suitable protection should be worn.
- The high luminance of the arc can cause severe damage to the eye if viewed directly. ALWAYS wear suitable protective goggles when viewing the lamp.
- Always use protective jackets supplied with the lamp.
- Should it be necessary to examine the lamp with the front bezel removed, always use a protective shield and wear goggles to ensure a safe working environment.
- Searchlights get hot. Never touch the unit when lit and always allow 15 to 20 minutes for cooling down after turning the searchlight off.
- Never place anything on or cover the searchlight when in use.
- Ensure the lamp has cooled sufficiently before removal.
- If undue force appears necessary to remove the lamp, the equipment should be inspected by a competent person or contact the manufacturer.
- When disposing of lamps there are several options available:
    - Return the lamp, via the supplier, to the lamp manufacturer in its complete packaging.
    - Because of the cold internal pressure of the lamp is approximately 8 bar, the lamp must first be depressurized before disposal. Place the lamp, in its protective jacket, in a plastic bag and drop from a height of 1 to 2 metres onto a hard surface.
- Xenon lamps do not contain materials which are harmful to the environment and thus are not subject to special waste disposal regulations.
- Due to the vast range of lamps available it may appear possible that more powerful lamps can be used in the equipment than for which it was designed. Even when the unit will physically accept a higher wattage lamp, this substitution is not recommended and is dangerous. This action will also void any warranties on the equipment.

  Always refer to the lamp manufacturer's technical data when dealing with lamps.

Back To Top

3 - Technical Information

This product has been designed to operate in accordance with the product specification. The FX560RC 3000-watt searchlight has the following features:

- All marine grade materials and fixings.
- Electronic power supply unit.
- Instant re-strike no cooling down time.
- Parabolic glass reflector.
- Powder coated & Stove enamel paint finish.
- 385° horizontal rotation.
- Vertical movement +30° to -35˚.
- Variable speed 1-23°/sec (Pan), 1-8°/sec (Tilt).
- RS485 connectivity & auto home positioning.
- Dimmable LED joystick panel.
- Toughened super clear Optiwhite front glass.
- Remote focus facility 1.5˚ spot to 10˚ flood.
- Sealing IP67 Gearbox, IP67 Searchlight & IP20 Power Supply.
- Heater fitted in gearbox & barrel.
- Weight Searchlight 74Kgs & PSU 24Kgs.

The searchlight also performs to the following optical data:

- Xenon light source.
- Lamp Wattage - 3000 Watts.
- Supply voltage – 220/240V single phase 50/60Hz.
- Peak Beam Candlepower – 175,000,000 lux.
- Range – 13,251 metres.
- Lamp life 2200 hours.
- Divergence - 1.5° spot to 10˚ flood.
- Temperature range: -50°C.

In order that the searchlight operates correctly it is imperative that competent personnel are responsible for the installation, operation, and servicing of this equipment. Failure to adhere to this advice may cause premature failure or incorrect operation of the searchlight, which may damage the equipment or cause personal injury.

Technical information on the Ignitor is included overleaf. For more detailed information please contact the manufacturer.

Ignitor ref: ZG 120 XE

DATA SHEET

ZG 120 XE

Igniter for low voltage DC-Lamps with Lamp-Currents up to 120 A

Features

Revolutionary drive system: needs no external power source,
self synchronisation with ballast

- Igniter for DC-Xenon and HQ discharge lamps operated by electronic ballasts
- Suitable for low voltage and high current DC lamps with lamp voltages up to 100 V DC
- Compliant to RoHS-directive 2002/95/EC
- Self stopping operation (2 sec.)
- DC-Impedance of about 1000 µΩ
- DC-Power loss of about 10 W @ 100 Amps, 15,8 W @ 120 Amps
- DC-Power loss of 28 W @ 160 Amps

ZG 120 XE

TECHNICAL DATA

Rated current	120 A, no add cooling
Temporary over current < 3 min. within a period of 6 min.	200 A
Ignition voltage	Min. 32 kVp
Input voltage range	DC 0-160 V / threshold for ignition > 70 V
Operation mode	Asymmetrical: cathode or anode grounding
Ignition mode control	Self stopping igniter nearly 2 sec./self sourcing by ballast, no external source necessary
Pulse rate	Approximately 30/sec. @ 70 V
Repetition rate	Depend on ballast, break of min.10 sec. is required
Operating temperature	115°C max. @ ignitioncoil TP 1 / 85°C @ TP 2
Cable length	HV to lamp 50 cm max., for hot re-ignition: short as possible
Dimensions (L x W x H)	115 x 103 x 30/45 mm
Weight	1020 g
Connectors	4 x M6 screw-terminals with nuts M6 for cable-shoes

REGULATORY SPECIFICATIONS	
Safety	According to IEC (UL) 60950-1
RoHS	According to 2002/95/EC

Technical modifications and errors excepted.

Back To Top

4 - Unpacking and Installation Instructions

The following instructions should be read and fully understood prior to installing the equipment to ensure that the correct procedures are followed, and all safety precautions are observed.

Note: If the equipment has been in storage for a considerable amount of time, it is advisable to conduct a routine maintenance check on all parts before installation.

Safety Precautions

This equipment should not be connected to an electrical supply before being installed. Installation procedures should be adhered to, to ensure a safe working environment and reduce the risk of damage or personal injury.

Preparing the Mounting Position

Mark out and drill the fixing holes through the deck (refer to drawing C21501). If anti-vibration mounts are to be fitted, the fixing holes for the mounts should also be marked out and drilled. Prior to manoeuvring the searchlight into its' fixing position, the AV mounts should be fitted to the base. When in the desired position, bolt the searchlight firmly down. On an uneven surface it may be necessary to use a suitable sealant such as silicone, to ensure a weatherproofed joint.

Back To Top

5 - Electrical Installation

Note: ~

When the main power is first applied to the searchlight, the searchlight will carry out a self-test, it will Pan to the left limit and Tilt down to the limit, once this is complete, the searchlight will then move to the centre and horizontal, during this please do not try and operate the searchlight while this test is being carried out. Once the searchlight is back at centre the searchlight can then be operated normally, by pressing the 1/0 button on the control panel.

For safety purposes, only competent personnel should perform the electrical installation. All equipment should be installed to current Electrical Regulations and Standards.

To obtain the maximum light output from the searchlight, it is essential that the full operating voltage of the lamp fitted be applied to the lampholder contacts.

Method of Electrical Connection

1) Disconnect the supply before working on the electrical system.
2) The searchlight must be connected to a fused electrical supply, using suitably sized cable.
3) If the searchlight is located a considerable distance from the mains supply, provision must be made in the cable size to overcome the voltage drop.

   The following table below indicates the maximum length of cable to be used for the AC supply cable:

Searchlight	240v 3Kw
Cable Size (mm²)	Distance Max
1.5	71 MTRS
2.5	120 MTRS
4	192 MTRS
6	286 MTRS
10	505 MTRS

4) Whenever possible cable terminations should be made below deck and with approved terminal devices.
5) For safety purposes it is advisable to fit an RCD.
6) If a spare auxiliary fuse or circuit breaker is not available, one of the correct type/rating should be fitted and connected to a positive supply. It is advisable to locate a bus bar or main connection and avoid any direct connection to the supply:
7) For 220v AC products, the following colour coding system should be used for the customer supply cable:

Brown	- Live
Blue	- Negative
Green/Yellow	- Earth

Note: This equipment must be earthed.

Installation Guidelines

A typical installation and connection routine for the FX560RC searchlight is as follows:

Referring to wiring diagram C28427, a supply is fed to the junction box, which then provides a common feed to the motor gearbox, searchlight, power supply enclosure and joystick panel. The searchlight has been pre-wired with 3 meters of cable from the motor gearbox to junction box provided. The searchlight head is pre-wired along with the connecting cable to the motor gearbox.

Cables required to be connected by the customer: -
2 pair twisted 0.22mm 100ohm screened cable from the joystick panel to the junction box.
5 cores 1.5mm cable from the PSU enclosure to the junction box.
4 cores 16mm cable from the PSU enclosure to the junction box.
Supply cable to the junction box.

Basic Operation

When the searchlight is switched on a supply is fed to the PSU and linked to the ignitor. Also, from the PSU, a dc output is fed to the lamp.
The ignitor ionises the gas within the lamp and this strikes the light.

All other facilities are fed via the joystick panel and motor gearbox.

When the light is in operation, the output from the PSU should be approximately 29v dc at 100amps.

Fitting instructions for the 3Kw xenon lamp

Referring to the diagram overleaf:

1) Unfasten ten latches (A) on the front and rear of the searchlight.

2) Remove the front bezel (B) and rear bezel (C) assemblies.

3) Unscrew the two M6 hexagon screws (D) from the front lampholder mounting block (E) and remove the front lampholder assembly from the mounting bracket.

4) Loosen the knurled screw on the front (F) and rear (G) lampholder assembles.

5) Attach the **NEGATIVE (cathode)** end of the lamp to the lamp holder socket (H) which is supplied separately, using the M8 x 10 grub screw (J).

6) The lamp can now be inserted with the lamp holder socket into the lamp holder rear (I), the negative (cathode) end of the lamp is towards the rear of the searchlight.

7) On the rear lamp holder, tighten the knurled screw (G) onto the lamp holder socket (H) to hold the lamp in position.

8) Fasten the front lampholder mounting block back in position, it will be necessary to pull the front socket against its spring to fit over the lamp. When in place tighten the front knurled screw (F).

9) Fasten the front and rear lampholder leads as wiring diagram, ensuring the connections are secure.

10) The front bezel and rear bezel can now be replaced.

11) Removal is the reverse of the above.

Back To Top

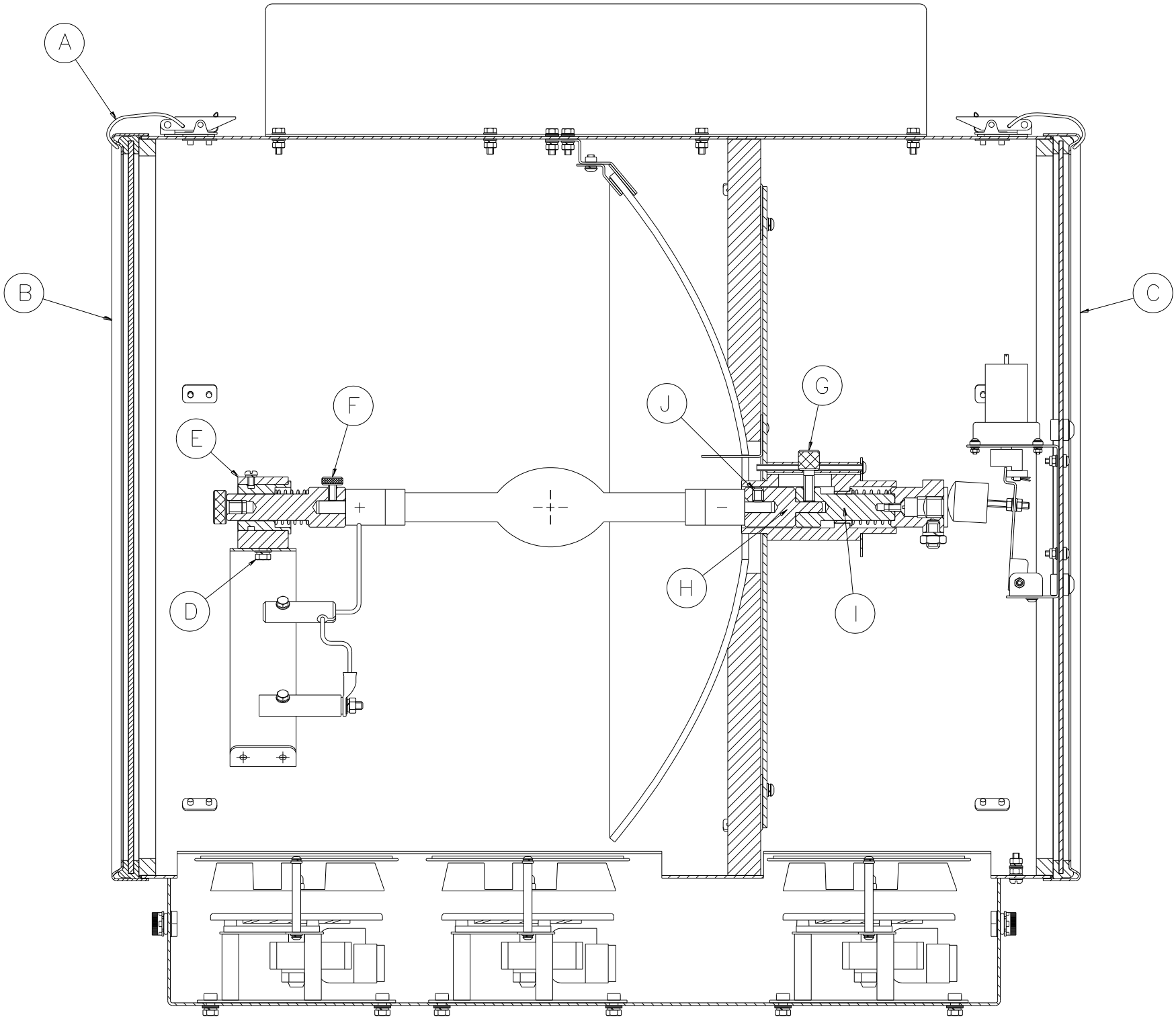
A
B
C
D
E
F
G
H
I
J

6 - Operating Instructions

This equipment is designed for use out of doors, in free air. Never place anything on or cover the searchlight when in use as this may present a hazard.

Switch On

The panel is activated using the 1/0 button. This will illuminate brightly when the panel is active.

Lamp Control

When the panel is active pressing the LIGHT, button will switch the lamp on or off.
If the control panel is switched off with the 1/0 button the lamp will switch off.

Focus Control

The lamp focus can be adjusted using the FOCUS button. Lamp focus will adjust continuously whilst FOCUS is pressed.

Beam Direction

The beam direction can be adjusted using the joystick when the panel is active. Moving the joystick left or right will pan the beam clockwise or anticlockwise.
Moving the joystick up or down will move the beam up or down. The speed of movement is proportional to the movement of the joystick. It is possible to move the beam in both directions at once by moving the joystick diagonally.

Home

The lamp can be returned to a pre-set home position. By default, this is dead ahead with the beam level although different positions can be programmed as described below.

Set New Home Position

To set a new home position move the lamp to the new desired home position. Switch the panel off then press the joystick down to its limit and press the lamp 1 button. The current position will now be the new home position.

Set Motion Limit (only available when Remote Focus is fitted)

The lamp travel can be limited in either axis and either direction. To set a new limit switch the panel on and move the lamp to the desired limit position. Switch the panel off then press and hold the focus button whilst moving the joystick full travel in the direction of the desired limit. Hold in this position for 4 seconds. For example, to set a limit to the tilt up motion; -

1. Switch panel on and drive the searchlight to desired tilt up limit position.
2. Switch panel off.
3. Press and hold the FOCUS button and hold joystick in the full up position for 4 seconds.
4. Tilt up motion will now be inhibited above the current position.

Clear Motion Limits

Motion limits as set above can be cleared by switching the panel off then pressing and holding the focus button and lamp 1 buttons together for 10 seconds.

Adjusting Panel Illumination

The panel illumination intensity can be adjusted to suit ambient light levels. To adjust the intensity, switch the panel on then switch it off with the 1/0 button and keep the 1/0 button pressed. To increase intensity, move the joystick to the right. To decrease move to the left. Note that the 1/0 button must be kept depressed whilst the joystick is moved. All indicators will illuminate whilst adjustments are performed. Adjustment is complete when the 1/0 button is released.

Obtaining Fault Status

Fault codes can be accessed by switching the control panel on with the 1/0 button and keeping the 1/0 button pressed for 10 seconds. Fault codes are indicated by the 1/0 button flashing a number of times related to the fault. Fault codes are detailed below. If more than one fault is present the 1/0 button will indicate them in sequence.

1. Pan Limit. – Either of the pan limit switches operated. Note that this may not actually be a fault. The LED will flash when a limit switch is operated under normal circumstances i.e., the lamp is at the limit of travel. This will also indicate when a variable limit is reached.

2. Tilt Limit. – Either of the tilt limit switches operated. Note that this may not actually be a fault. The LED will flash when a limit switch is operated under normal circumstances i.e., the lamp is at the limit of travel. This will also indicate when a variable limit is reached.

3. Pan motor over current. – The pan motor is taking excessive current. The motor will be disabled for a period when this occurs. Fault indication will remain until power is removed or the fault is corrected.

4. Tilt motor over current. – The tilt motor is taking excessive current. The motor will be disabled for a period when this occurs. Fault indication will remain until power is removed or the fault is corrected.

5. Focus motor over current. – The focus motor is taking excessive current. The motor will be disabled for a period when this occurs. Fault indication will remain until power is removed or the fault is corrected.

6. FBUS interface over current. – The speed control card supplies 24VDC to the remote-control panels. This fault indicates the 24VDC output is taking excessive current. The FBUS supply output will switch off. To restore this output, remove the supply from the speed control card for a period.

7. Anti-condensation heater output over current. – The 24VDC anti condensation heater output is taking excessive current. The heater output will switch off. To restore this output, remove the supply from the speed control card for a period.

8. Limit Switch Error. Some lamp types do not use all or some limit switches. If an invalid limit switch input is detected it is probable the speed control card is set to the wrong product or there is a wiring error.

9. Datum Error. The start-up datum system has not completed correctly.

10. Product type not set or corrupt. The product type has not been set, has been set incorrectly or is corrupt.

11. Supply voltage out of tolerance. The 24V supply is outside the range 18-30V.

Setting to Work

Safe service in use necessitates the strict observance of the following precautions.

- Any article fabricated from quartz or glass is inherently fragile and care should therefore be taken, always, when handling lamps.
- Eye protection must be worn when handling lamps that have been removed from their packaging materials. The protective jacket should not be removed from the lamp for safety reasons, as there is a remote possibility of the lamp shattering violently, especially if it is subjected to mechanical shock or vibration.
- Ensure that the power rating of the Xenon lamp to be fitted is suitable for the lamp house and power supply equipment (rectifier).
- Always isolate the equipment from the supply before inserting a lamp.
- Before inserting the lamp ensure that all contacts are clean. Contacts must be renewed at the slightest sign of corrosion. Sanding or filing down corroded areas is not recommended as this will only make the conducting surface between the pin and lampholder smaller, thus causing the lamp to overheat.
- The inert gas (Xenon) used in the lamps is under a pressure of several bar even when the bulb is cold. FOR SAFETY REASONS THE LAMP MAY ONLY BE INSERTED INTO THE LAMPHOUSE WITH THE PROTECTIVE JACKET FITTED.
- Do not twist or bend the fused quartz bulb when fitting the lamp as mechanical stresses MUST be avoided.
- Ensure that the spring contacts firmly surround the pins on the cap of the lamp. Do not apply unnecessary force when tightening the screws.
- After inserting the lamp, ensure that there is sufficient axial play in the lampholder. The lamp must be capable of unimpeded expansion when it warms up to operating temperature. Mechanical forces must not be applied to the fused quartz bulb.
- Electrical leads must be arranged in such a way that there is a sufficient air gap (approximately 40mm) between them and the lamphouse, in order to prevent flashovers from the ignition voltage. All flexible leads must have strain-relieving clamps.
- Before putting the lamp into service for the first time, check the polarity of the electrical connections. INCORRECT POLARITY WILL CAUSE IMMEDIATE DESTRUCTION OF THE LAMP.
- Before the protective jacket is removed, suitable protection must be worn i.e face mask and gloves with wrist protection.
- Never touch the quartz bulb with bare hands, as fingerprints will make the glass cloudy and cause a severe loss of light. This may also cause recrystallisation and thus weaken the bulb material. Should the bulb be inadvertently touched, remove fingerprints with methylated spirit and a clean, soft paper towel. The bulb should then be wiped with distilled water. NOTE: ALWAYS WEAR MASK AND GLOVES DURING CLEANING).
- All packaging and the protective jacket must be retained for re-use. Whenever removing a lamp, the protective jacket must always be used for safety reasons.

Notes:

1) The lamps are designed for dc operation only. The dc current may only be varied within the limits of the current control range. The lamp operates best at rated current; over the life of the lamp, the current may be increased to its maximum value to compensate for loss of light. The output of the lamp can be reduced by operating the lamp at minimum current, but this does not prolong the life of the lamp.
2) For safety reasons, the lamps should be replaced once they reach the end of their average lamp life, and not later than 1.25 times their average lamp life. After this time there is an increased risk of the lamp exploding.
3) The anode (positive cap marked '+') must be on top when the lamp is inserted in the vertical position. If the anode is incorrectly inserted the arc will be unstable, the bulb will blacken more quickly, and the lamp will prematurely fail.
4) The HT lead from the high voltage terminal of the ignitor, must be connected to the cathode (negative cap marked '- '). If the lamp is connected with the wrong polarity it will be irreparably damaged after a very short time.
5) In all circumstances the lamp manufacturer's data should be referred to when dealing with lamps.

Back To Top

FBUS SPEED CONTROL ASSEMBLY DETAILS

MAINS CONNECTORS

L	Live.
N	Neutral
E	Earth

TILT CONNECTOR

MR	Tilt Motor Red Wire (+)
MB	Tilt Motor Black Wire (-)
ER	Tilt Encoder Red Wire (5V). (Voyager Brown Wire)
EG	Tilt Encoder Green Wire (Phase A Output) (Voyager Yellow Wire)
EW	Tilt Encoder White Wire (Phase B Output)
0V	Tilt Encoder Black Wire (Voyager Blue Wire)
	Tilt Limit Switch Common Black Wire
UL	Tilt up Limit Switch Orange Wire
DL	Tilt down Limit Switch Blue Wire

PAN CONNECTOR

MR	Pan Motor Red Wire (+)
MB	Pan Motor Black Wire (-)
ER	Pan Encoder Red Wire (5V)
EG	Pan Encoder Green Wire (Phase A Output)
EW	Pan Encoder White Wire (Phase B Output)
0V	Pan Encoder Black & Pan Limit Switch Common
CL	Pan Clockwise Limit Switch Orange Wire (As viewed looking down on lamp)
AL	Pan Anticlockwise Limit Switch (As viewed looking down on lamp)

HEAD CONNECTOR

0	0V Common for Heater & Focus (If Searchlight has an igniter terminal is not used)
H	Heater Active High Output
F	Focus Motor Active High Output
S	Focus position potentiometer.

HEAD 2 CONNECTOR

0	0V Common for Heater & Focus (If Searchlight has an igniter terminal is not used)
FP	Focus position potentiometer
F	Focus active high 5v output
L	Lamp active high 5v output
24	24v supply out.

FBUS CONNECTOR

0	OV out to Joystick Panels
T	Line Terminate (Connect to + for terminate)
+	FBUS Data +
-	FBUS DATA -
24	24V Supply out to joystick panels.

24 VOLT INPUT

- Negative
+ Positive

LAMP RELAY

Relay input
Relay output

FBUS Speed Control Board

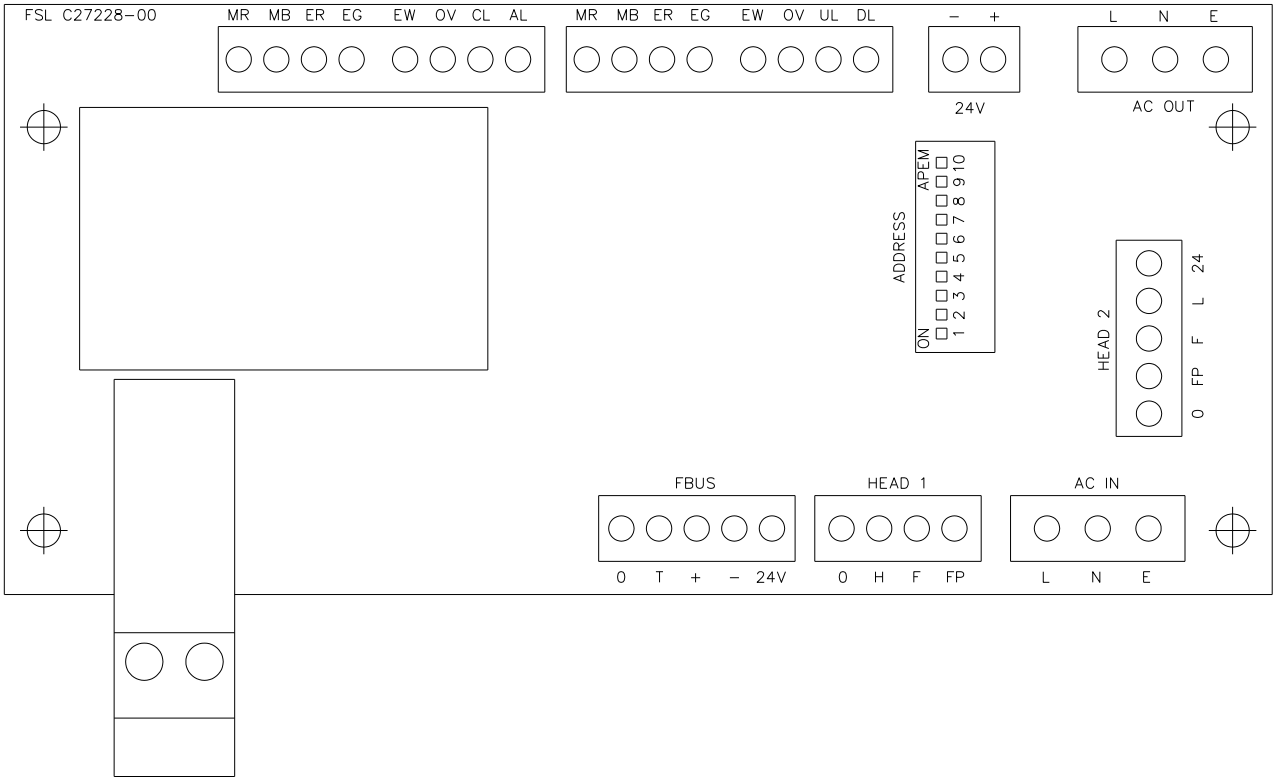

CONNECTIONS TO FBUS JOYSTICK CONTROL PANEL

FBUS CONNECTOR

0	OV Supply Input
T	Line Terminate (Connect to + for terminate)
+	FBUS + RS485 Data In/Out
-	FBUS - RS485 Data In/Out
24	+24V Supply Input

JOYSTICK CONNECTOR

BK	Joystick Black Wire
Y	Joystick Yellow Wire
BL	Joystick Blue Wire
R	Joystick Red Wire

FBUS JOYSTICK CONTROL BOARD

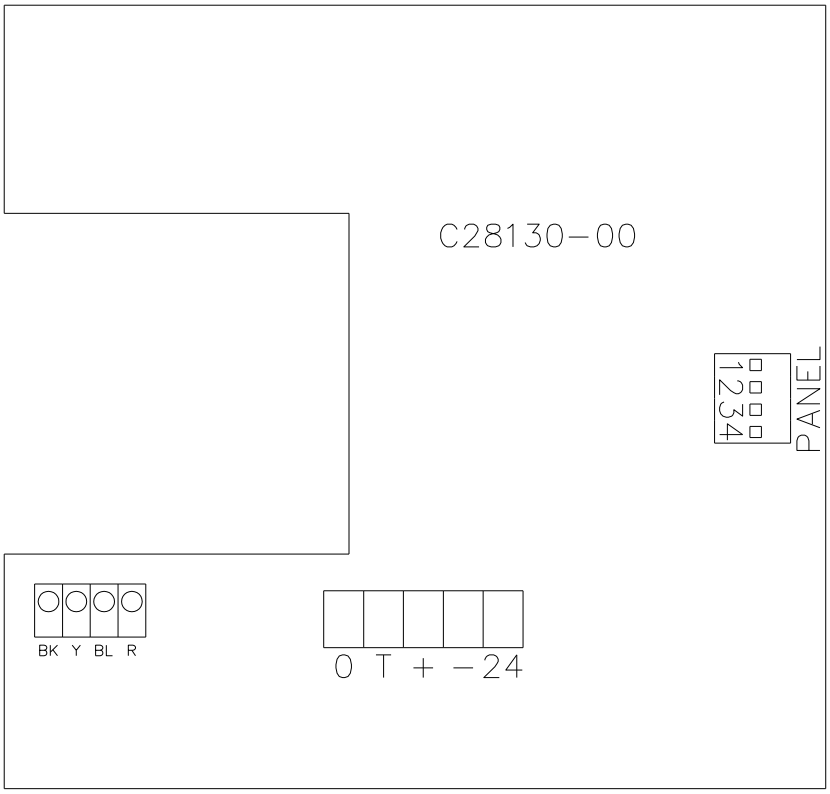

FBUS ADDRESS SWITCHES

OVERVIEW

FBUS uses two types of address switch. One type is rotary, and the value selected is the value shown on the dial. The other type is rows of switches whose operation is described below: -

The switches all operate in the same manner producing a binary value with the highest binary value to the left and the lowest value to the right. The values for each switch are listed below: -

SPEED CONTROL CARD LAMP ADDRESS

SWITCH NUMBER	VALUE
SWITCH 10	1
SWITCH 9	2
SWITCH 8	4
SWITCH 7	8
SWITCH 6	16

FBUS DATA PROTOCOL

OVERVIEW

The Francis bus (FBUS) is a custom communication protocol based on RS485 two wire bi-directional communication hardware. The system provides a simple bi-directional link between lamps and lamp control panels. The system allows given panels to communicate with different lamps and also allows a number of panels to communicate with the same lamp.

DETAILED DESCRIPTION

The FBUS system runs at 38.4K Baud. This low data rate facilitates longer cable runs and complements the fairly small amount of data transfer required whilst still providing a fast response. The data frame is 11 bits with 9 data bits, one start and one stop bit. A simple error detection system is employed which is described in detail later. Data is sent LSB first.
To prevent data collisions the system uses a polling technique. Lamp number 0 is the default bus master and controls timing of all communications by polling other units connected to the bus. If lamp 0 is not operating or powered down, lamp 1 automatically becomes the bus master as will lamp 2 if lamp 1 is not operating.

The system differentiates between address and data values by setting data bit 8 high for an address. Panel 2 address would therefore be sent as hex 102 or binary 100000010. The lamps and panels use different address ranges with panels being addresses 0-15 and lamp addresses starting at 16 and going up to 56. A lamp whose address was set to 0 on the address switches will actually be address 16 and would be transmitted as hex 110 or binary 100010000.

If lamp 0 is active this becomes the bus master and sequentially transmits the full address range. No other units will transmit until they receive their address. Each address is followed by a 1mS dead period where the master switches from transmit to receive and monitors the bus for activity. If activity is present the master will not transmit the next address until 1mS after bus activity ceases. After the full panel address range has been sent (addresses 0-15) the master starts to send lamp addresses.

These operate slightly differently in that, if more than three successive addresses do not illicit a response, the bus master will assume the last lamp has been polled and re starts the data cycle by reverting to panel address 0. When a remote panel receives its address, it will send data if it has any to send, if not, no data will be sent. Lamps operate differently in that they will always send data after they have seen their address on the bus.
Panels can send data to any lamp therefore they transmit a modified lamp address value prior to the lamp command(s). The modified address is received by lamps and, if it matches their own address, the command(s) which follow will be received and processed.

A detailed description of panel and lamp data follows.

PANEL TRANSMITTED DATA
Panels only send data when there is data to be sent i.e., there has been activity at the panel which must be sent to a given lamp. If there is no data to be sent, a panel will not transmit. The amount of data a panel sends will depend upon the amount of activity at the panel and can be 2 to 10 bytes. The commands described below are sent after a panel receives its address which it uses as indication that it has a transmit time slot. Before any commands are sent the panel must define which lamp the data pertains to. This is achieved by preceding the command with a lamp address. Note that bit 7 is not set when a panel defines the lamp to which it is to transmit. Lamps recognise the address and receive data when the address matches their own. To send commands to lamp number 2 a panel would precede the lamp command(s) with the address value Hex 2, Binary 000000010. It is important to note that multiple commands must be sent in numerical order i.e., a command with value 01 must be sent before a command with 06 etc.

Panel transmit commands are listed below; -

DATA_PAN_JOYSTICK (Hex 01)
This is a two-byte command and must be immediately followed by another byte whose value determines the lamps direction and speed. The value is centred on 128 and has a range of 128 +/- 64. A value of 130 will make the lamp rotate slowly clockwise. Increasing the value will make the lamp move faster. A value of 126 will make the lamp rotate slowly anticlockwise. Decreasing the value will make the lamp move faster. Transmitting values 01 then C0 would make the lamp pan clockwise at full speed.

DATA_TILT_JOYSTICK (Hex 02)
This is a two-byte command and must be immediately followed by another byte whose value determines the lamps direction and speed. The value is centred on 128 and has a range of 128 +/- 64. A value of 130 will make the lamp point upwards slowly. Increasing the value will make the lamp move faster. A value of 126 will make the lamp move down slowly. Decreasing the value will make the lamp move faster. Sending values 02 then C0 would make the lamp tilt up at full speed.

DATA_LAMP_BUTTON (Hex 0A)
This is a single byte command. The same command is sent to switch the lamp on or off. This command must only be sent once for each press of the button. Sending again will switch the lamp again. Basically, if the lamp was off, sending this value will switch it on. If the lamp was on, sending this value will switch it off. This technique is employed to facilitate simultaneous lamp control from a number of different panels. Basically, what is sent is just information that the lamp on off button has been pressed. How the lamp reacts to this depends on the lamp’s current status. Most of the other lamp button commands operate in a similar manner except the focus button. Confirmation that the command has been received can be obtained by reading the lamp status byte described below.

DATA_FOCUS_BUTTON (Hex 0B)
This is a single byte command. When the lamp receives this, it will run the focus motor as long as the command remains. A panel will send this command so long as the focus button is pressed.

DATA_HOME_BUTTON (Hex 0C)
This is s single byte command. A lamp receiving this will automatically move to the pre-set home position. The command does not need to be maintained while the lamp moves to home.

DATA_RECORD_BUTTON (Hex 0D)
This is a single byte command. The first time a lamp receives this command it will enter record mode and start monitoring all movement and lamp switching information. Recording will continue until the command is received again when it will stop recording. As with most of the button commands it is essential this command is just sent once. Confirmation that the command has been received can be obtained by reading the lamp status byte described below.

DATA_PLAY_BUTTON (Hex 0E)
This is a single byte command. The first time this is received a lamp will start playing back any movement / lamp switching activities which were recorded using the record function above. This will continue until the command is received again or the lamp receives a move command (DATA_PAN_JOYSTICK or DATA_TILT_JOYSTICK).

DATA_HOME_LP (Hex 0F)
This is a single byte command which activates when the home button is pressed and held for 5 seconds (Home Long Press). This is used to store a new home position. A lamp receiving this command will store the current position as the value to move to when the home button is pressed normally. Note that a lamp can only receive up to 10 bytes at a time. A panels transmit sequence is the modified receiving lamp address followed by data commands then the CRC. The CRC is formed by the sum of all the commands + the lamp address value – note however that the address value used in the CRC is the unmodified value (Bit 7 clear).

DATA_PAN_POSITION (Hex 18)
This is a three-byte command. Following the DATA_PAN_POSITION command two data bytes specify the position to which the lamp must move. The bearing resolution is 0.1 degrees. The value is sent LSB first with the first byte representing the lower position command bits. The MSB (sent last) lower 4 bits represents the remaining value. The position value is centred on 2048 (Binary 1000 0000 0000) so a value of 2048 would make the lamp move to the dead ahead position. An increasing value represents a clockwise motion with a resolution of 0.1 degrees. A value of 2058 would therefore represent 1 degree clockwise (2058 = 2048 + 10 – but resolution is 0.1 degrees so a value 10 = 1 degree). Values below 2048 represent anticlockwise motion so a value of 1048 would represent an angle 100 degrees anticlockwise of centre.

DATA_TILT_POSITION (Hex 19)
This is a three-byte command. Following the DATA_TILT_POSITION command two data bytes specify the position to which the lamp must move. The bearing resolution is 0.1 degrees. The value is sent LSB first with the first byte representing the lower position command bits. The MSB (sent last) lower 4 bits represents the remaining value. The position value is centred on 2048 (Binary 1000 0000 0000) so a value of 2048 would make the lamp move to the dead ahead position. An increasing value represents tilting up with a resolution of 0.1 degrees. A value of 2058 would therefore represent 1 degree up from dead ahead (2058 = 2048 + 10 – but resolution is 0.1 degrees so a value 10 = 1 degree). Values below 2048 represent tilting down so a value of 1748 would represent an angle 30 degrees down from centre.

LAMP TRANSMITTED DATA
A given lamp after it receives its normal address (Hex 110 to Hex 138) will always send the following data in this specific order. The lamp must transmit its first data byte (pan position) within 1mS of receiving its standard address and the gaps between successive bytes must be less than 1mS.

Lamp TX Byte 1 – Pan position LSB
Lamp TX Byte 2 – Pan position MSB
Lamp TX Byte 3 – Tilt position LSB
Lamp TX Byte 4 – Tilt position MSB
Lamp TX Byte 5 – Lamp status
Lamp TX Byte 6 – CRC

Each byte is described below.

Pan Position
This is a 12-bit value with lamp pointing straight ahead being a value of 2048 and the value increasing as the lamp rotates clockwise as viewed from above. The system has a resolution of 0.1 degrees so 90 degrees clockwise from centre would be a value of 2948 (2048 + 900).

Tilt position
This is a 12-bit value with lamp horizontal being a value of 2048 and the value increasing as the lamp beam points up. This has a resolution of 0.1 degrees.

Lamp Status
This is an 8-bit value with each bit representing a specific status aspect. The bit functions are listed below; -
Bit 0 - Lamp on
Bit 1 - Pan Limit reached
Bit 2 - Tilt Limit reached
Bit 3 - Lamp Recording
Bit 4 - Lamp Playing
Bit 5 - Lamp Overheated
Bit 6 - Lamp moving to home.
Bit 7 - Reserved
The bits are all true logic so if the lamp is switched on, bit 0 will be high.

CRC
The CRC is a simple data checking system. Basically, this is just the sum of the lamps address and bytes above. The value is radix to 8 bits. If the lamp address was 0 (bus address value 16) and the pan and tilt were both at centre and the lamp was switched on and all other status bits were 0 the values would be Hex 110, 80, 80, 01. This would give a CRC value of 11.

Each lamp connected to the bus will always send the data sequence above after it detects its address on the bus. This is basically broadcast information which will be picked up by any panel whose lamp address value matches the currently transmitting lamp address. In this way a panel, which can access more than one lamp, will always update to reflect the status of the currently selected lamp more or less instantly.

EXTERNAL INTERFACE TO LAMPS
Interfacing to FBUS is simple. Any external interface must act as a slave and only send data when given an address slot. The address of an external interface can be any of the panel addresses providing these are not in use by other panels connected to the bus. To receive data from a lamp simply wait for the specific lamps address to be present on the bus then load the next six bytes which will comprise the lamps transmitted data as described above. A detailed description of transmitting and receiving is described below.

TRANSMITTING TO A LAMP
Basically, any sending device mimics a control panel. The full range of panel transmit commands, as described above, can be employed. Data can be sent to any lamp on the system. Two transmit examples are listed below.

EXAMPLE 1
Sending a lamp on/off command using panel 0 address and sending to lamp address 0. Note that the lamp will change switched state each time this command is sent therefore this should only be sent once.

1. Wait for panel address 0 (Hex 100) to be received from the bus.
2. Transmit lamp 0 address (Hex 110) within 1mS. Lamp address 0 is physical address 16 (Hex 10). When a panel sends to a lamp bit 8 is set (hex 100).
3. Send DATA_LAMP_BUTTON Command (Hex value 0A) within 1mS.
4. Send CRC value, in this case Hex 110 + Hex 0A = 11A after radix to 8 bits = 1A. This completes the transmission.

EXAMPLE 2
Sending a half speed pan clockwise command using panel 1 address and sending to lamp address 6. – Note that in this example the lamp will continue to pan as long as the command is repeated.

1. Wait for panel address 1 (Hex 101) to be transmitted by the master.
2. Transmit lamp 6 address (Hex 16) within 1mS. Lamp address 6 is physical address 22 (Hex 16).
3. Send DATA_PAN_JOYSTICK Command (Hex value 01) within 1mS.

4. Send pan value half speed = 128 + (64/2) = Hex A0 within 1mS.
5. Send CRC value, in this case Hex 116 + Hex 01 + Hex A0 = 1D7 after radix to 8 bits = B7.
6. This completes the transmission.

RECEIVING FROM A LAMP
Lamps broadcast data sequentially. There is no need to actively request data to be sent, just wait for the lamps address with bit 7 set to be present on the bus and load the next six bytes. An example is given below; -

EXAMPLE
Obtain lamp number 2 pan position.

1. Listen to the data bus and wait for value Hex 112. (Lamp addresses start at hex 10 so lamp 2 is value 12. Addresses always have bit 8 set so total value is Hex 112).
2. Load the next six bytes from the bus.
3. If desired check the last of the six bytes which is the CRC.
4. Read the two bytes which will be a value centred on 2048 increasing for clockwise from centre and decreasing for anticlockwise. This is lamp number 2 current pan position.

FBUS Speed Control Assembly Status LED Operation

Overview

The FBUS motor control card has a status LED near the centre of the card (labelled ‘STATUS’). This has a number of functions as detailed below.

SOFTWARE VERSION
When power is applied to the speed control card the status LED will flash green. The number of flashes corresponds to the software version.

FBUS NORMAL OPERATION
When the system is operating from FBUS the status LED will illuminate static green. When a valid FBUS data signal is received the LED will switch off momentarily to indicate data reception. If data is continuous the LED will flash green slowly.

DMX NORMAL OPERATION
When the system is operating from DMX the status indicator will flash green slowly when DMX data is present. If no DMX data is present the LED will be static green.

OPERATION DURING FAULTS
During faults normal status LED operation is overridden. The status LED will flash red a number of times with the number of flashes corresponding to the specific fault. If there are multiple faults the LED will flash accordingly with a gap between each fault flash sequence. Fault details are provided below with the number of flashes indicated on the left.

1. Pan Limit. – Either of the pan limit switches operated. Note that this may not actually be a fault. The LED will flash when a limit switch is operated under normal circumstances i.e., the lamp is at the limit of travel. This will also indicate when a variable limit is reached.

2. Tilt Limit. – Either of the tilt limit switches operated. Note that this may not actually be a fault. The LED will flash when a limit switch is operated under normal circumstances i.e., the lamp is at the limit of travel. This will also indicate when a variable limit is reached.

3. Pan motor over current. – The pan motor is taking excessive current. The motor will be disabled for a period when this occurs. Fault indication will remain until power is removed or the fault is corrected.

4. Tilt motor over current. – The tilt motor is taking excessive current. The motor will be disabled for a period when this occurs. Fault indication will remain until power is removed or the fault is corrected.

5. Focus motor over current. – The focus motor is taking excessive current. The motor will be disabled for a period when this occurs. Fault indication will remain until power is removed or the fault is corrected.

6. FBUS interface over current. – The speed control card supplies 24VDC to the remote-control panels. This fault indicates the 24VDC output is taking excessive current. The FBUS supply output will switch off. To restore this output, remove the supply from the speed control card for a period.

7. Anti-condensation heater output over current. – The 24VDC anti condensation heater output is taking excessive current. The heater output will switch off. To restore this output, remove the supply from the speed control card for a period.

8. Limit Switch Error. Some lamp types do not use all or some limit switches. If an invalid limit switch input is detected it is probable the speed control card is set to the wrong product or there is a wiring error.

9. Datum Error. The start-up datum system has not completed correctly.

10. Product type not set or corrupt. The product type has not been set, has been set incorrectly or is corrupt.

11. Supply voltage out of tolerance. The 24V supply is outside the range 18-30V.

FBUS CONTROL INSTALLATION AND OPERATION.

OVERVIEW

FBUS Control facilitates control of up to 12 searchlights from a PC. The system communicates to Francis Searchlights FBUS data system using one or more FBUS Interface units. Communication between the PC and FBUS interface can be RS485, RS422, USB (VCP) or UDP.

SOFTWARE INSTALL

Open the FBUS Control ZIP file and click 'Setup'. Windows should provide prompts to complete the installation.

CONFIGURATION

Start FBUS Control and press the SETTINGS button. The window below should display.

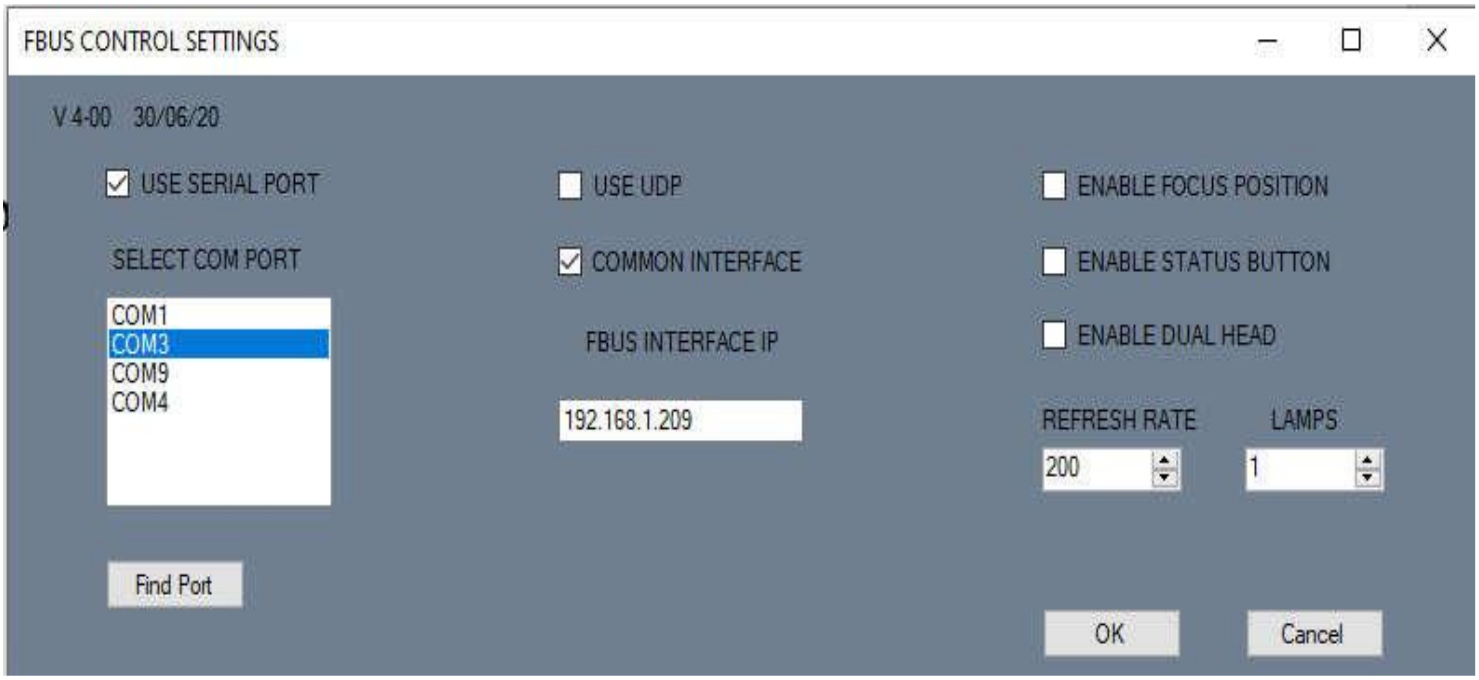

COMMUNICATION SETTINGS

Settings must be configured to suit the application. For systems where FBUS Control communicates with the FBUS Interface via a serial link (RS422, RS485 or USB), the USE SERIAL PORT tick box should be checked. The desired com port can now be selected. To find the correct com port, set the FBUS interface to the correct communication protocol and set the data rate to 9600K. Connect the data cable. Press the FIND PORT button. A message box should display the port number relating to the FBUS interface and the correct port will be set in the SELECT COM PORT text box. For systems using UDP Communications (Ethernet / internet) the USE UDP checkbox should be set. When using UDP, FBUS control can operate in two ways. For systems where all lamps are controlled from the same FBUS data system, the COMMON INTERFACE check box should be set. With this configuration the system will communicate to one FBUS interface. The second mode facilitates communication with lamps in different locations using a number of FBUS interfaces with independent IP Addresses. For this mode the COMMON INTERFACE tick box should be cleared. The SETTINGS window will now change as detailed overleaf; -

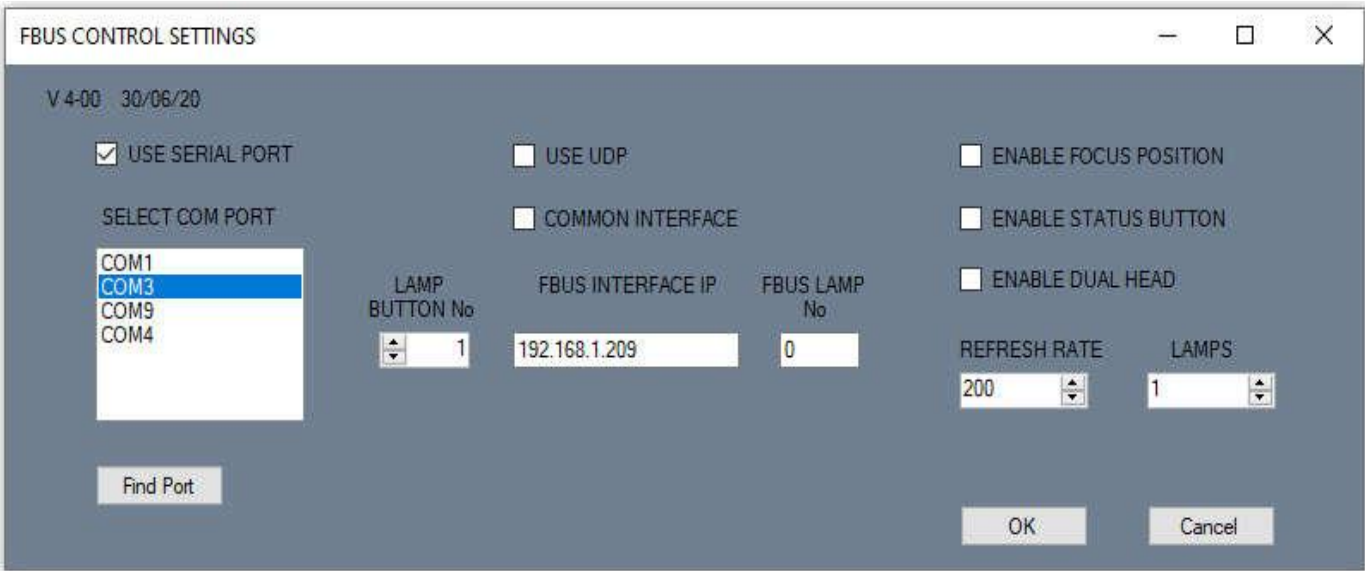

The new settings allow each lamp to communicate to a different FBUS Interface with an independent IP address. It is also possible for the system to control a number of lamps on one interface and more lamps on another interface. The IP address of the interface relating to each lamp should be entered in the FBUS INTERFACE IP box and the lamp No to be controlled on a given FBUS system to be entered into
The FBUS LAMP No box. The LAMP BUTTON No indicates the lamp button corresponding to the settings displayed. For example, suppose a three-lamp system with two lamps connected to one FBUS interface (IP address 000.000.000.001) and a third lamp connected to a different FBUS interface (IP address of 000.000.000.002). To configure the system set LAMP BUTTON No to 1. Enter 000.000.000.001 for the IP address. Set FBUS LAMP No to 0. Change LAMP BUTTON No to 2 and set IP address to 000.000.000.001. Set FBUS LAMP No to 1. Now set LAMP BUTTON No to 3 and enter IP address 000.000.000.002. Set FBUS LAMP No to 0.
This system will control three searchlights the first two being connected to an FBUS interface at location A. The third lamp is controlled from a separate FBUS interface at location B.

OTHER SETTINGS

LAMPS
This should be set to the total number of lamps to be controlled. Once the settings window closes a number of lamp buttons will appear on the main window relating to the LAMPS Setting. Note that for single lamp systems LAMPS should be set to one. For a single lamp there will not be any lamp buttons as there is only one selection possible.

REFRESH RATE
This controls the rate at which data packets are sent from FBUS Control. The value is in Milliseconds and must be set to suite the network conditions.

ENABLE FOCUS POSITION
Some lamp types provide a value relating to the lamps Focus. Setting this checkbox displays the Focus setting in the main window.

ENABLE STATUS BUTTON
For all new systems this should be set. Its inclusion is just for compatibility with legacy systems.

ENABLE DUAL HEAD
Some searchlights have dual heads with 2 separate lamp units. Setting this box display buttons for control of the second head.

Once all settings are complete close the settings window using the OK button. If settings are valid the software will restart with the new settings applied.

OPERATION
FBUS Control is very simple to use. The controls are detailed below; -

LAMP X Buttons (OPTION)
For systems which control just one lamp, the NUMBER OF LAMPS setting in the SETTINGS window should have been set to one. If this is the case, there will not be lamp buttons.
For systems with more than one lamp, the desired lamp should be selected with the appropriate LAMP X button. The button will change colour indicating lamp selection. All subsequent commands will be directed to the selected lamp and all displayed information will pertain to the selected lamp.

LAMP ON / OFF Buttons
These switch the lamp on and off. The 'LAMP ON' button will illuminate red to indicate when the lamp is switched on. If the DUAL HEAD option in SETTINGS is set there will be lamp on off button for each lamp head.
If the currently selected lamp is switched on or off from a different control station the lamp on the LAMP ON button will change to indicate the current lamp status.

FOCUS
When this button is selected with the mouse the lamp focus will operate adjusting the lamps beam width as long as the left mouse button is held down over the button. If the DUAL HEAD option in SETTINGS is set there will be two focus buttons.

HOME
If a valid home position has been set, pressing the home button will cause the lamp to drive to the home position. The home button will turn red while the lamp is moving.
If another control station sets the lamp to home, the home button will turn red while the lamp is moving to home.

PLAY
The FBUS system can store and recall sequences of lamp motion and lamp on / off switching. Pressing the play button will start playing back a pre recorded sequence. The play button will turn red when a sequence is playing.
If another control station switches the lamp to play the button will turn red.

SET HOME
This button sets the current lamp position as the home position. The lamp will move to this position when the Home button is pressed.

RECORD
Pressing Record begins a record sequence. Lamp movements and lamp on off switching will be stored while the record system is active. Pressing Record again finishes the record sequence. Note that when Record is pressed a message box will appear asking the user to confirm the record command. This is included to prevent accidental over writing of previously recorded sequences. The record button will turn red while recording is active.
If a different control station initiates recording the record button will turn red.

VIRTUAL JOYSTICK
The virtual joystick is the dark grey circle near the bottom left of the FBUS Control window. The virtual joystick facilitates lamp pan and tilt movement. To move the lamp up (Tilt up) move the mouse over the yellow dot at the centre of the virtual joystick. Press and hold the left mouse button and move the yellow dot up from centre. The lamp will start to tilt up. The speed of tilt is proportional to the yellow spot distance from the centre of the joystick area. To make the lamp tilt down move the yellow dot down. To make the lamp pan left or right use the same procedure but move the yellow dot left or right. Moving the dot diagonally will cause both axes to operate together.

POSITION VALUES
The position window displays the currently selected lamps position. The values for pan and tilt are both +/- referenced from mid centre. The display values are in degrees with a resolution of 0.1 degrees. The selected lamp can be commanded to move to a specified position using the up / down buttons adjacent to the pan and tilt angle displays. When the angle is adjusted locally the GO button will highlight. Once the desired position is set press the GO button. The lamp will drive to the position entered.

STATUS
Pressing the Status button brings up the LAMP STATUS window below; -

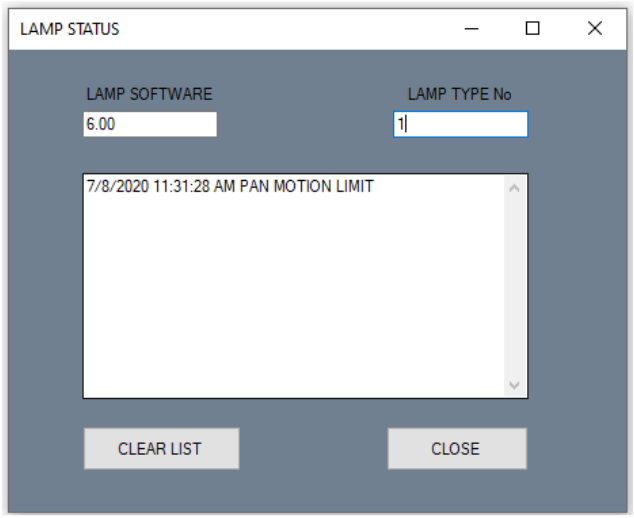

The LAMP STATUS window lists any events or faults relating to the selected lamp. This can be useful for fault diagnosis. The list can be cleared allowing all events after a given time to be reported. The LAMP STATUS window also displays the currently selected lamps software version and lamp type No

FBUS INTERFACE UNIT (if supplied)

OVERVIEW

Francis Searchlights FBUS data system facilitates control of up to 30 searchlights from multiple control stations. To provide the required control response whilst maintaining a low data rate for extended transmission distance, the FBUS data system involves precisely timed control signals.

The FBUS interface offers a simplified communication interface to the FBUS data system over a number of different physical layer communication standards and data rates. The system also facilitates long range communications over LAN / Internet.

When used with Francis searchlights FBUS Control software the FBUS interface can control networks of lamps over local communication systems or globally via the internet.

POWER / FBUS CONNECTION

The FBUS interface obtains a supply from the FBUS data system, no external power supply is required. The interface connects to the four wire FBUS system like any FBUS system component. The four-wire interface provides 24V supply and RS485 communications with FBUS.

EXTERNAL INTERFACE AND CONNECTIONS

The FBUS interface supports RS422 (4 wire), RS485 (2 wire), USB (VCP) and UDP.
Connections are detailed below; -

RS485
0 Common 0V
+ Data +
- Data –

RS422
0 Common 0V
Out + Data + out from interface
Out - Data – out from interface
In + Data + into interface
In - Data – into interface

USB
Type B Socket

Ethernet (UDP)
RJ45

OPERATOR INTERFACE

Four buttons control a simple menu system with a 2-line LCD display. A given menu item is selected with the SEL (select) button. If the menu item has an adjustable parameter this can be altered using the up and down arrow keys. The revised parameter is stored using the ENT (enter) button. A list of the menu items is provided below; -

MENU ITEMS

DEFAULT DISPLAY
The default display will be active from switch on until the select button is pressed. The default display has no adjustable parameters. The display indicates the FBUS status and currently selected lamp status.

SET PANEL ADDR
FBUS interface functions like a standard control panel on the FBUS system as such it must have a panel address. The panel address must not be set to the same value as any other panel on the system. Panel addresses start at 0 and go up to 15. Panel addresses should be sequential and start from zero. Once set pressing ENT stores the address.

SET LAMP ADDRESS
The interface unit has menu items (described below) which send commands directly to a given lamp. The default display described above displays data from a given lamp. The set lamp address item is used to define the ‘given lamp’ number.
Note that this setting does not alter the interface operation with external data relating to communication with different lamps. A command to the interface will send data to the lamp number specified in the data packet.

SET COMMS TYPE
Selects the physical layer communication system for the external interface. Options are RS485, RS422, USB (VCP) and UDP.

SET DATA RATE
Selects the data rate for the external interface. Note that data rate adjustment is not allowed for UDP. When using the interface with FBUS Control software the data rate must be set to 9600 Baud.

DATA CHECKING
Used to enable or disable received data checking for the external interface. Switching data checking off can be useful during external communication system development. This does not inhibit CRC transmission or FBUS data checking.

SWITCH LAMP
A function included principally to aid external interface development and verify correct FBUS / lamp operation. Use the arrow keys to select lamp on or lamp off from line 2 of the display. Pressing ENT will send the on or off command to the currently selected lamp (see set lamp address).

SET PAN ANGLE
For system development and testing, this command sends a move to pan position command to the currently selected lamp. The pan angle is set using the arrow keys. Pressing ENT will move the lamp to the displayed angle.

SET TILT ANGLE
For system development and testing, this command sends a move to tilt position command to the currently selected lamp. The tilt angle is set using the arrow keys. Pressing ENT will move the lamp to the displayed angle.

FOCUS
For system development and testing, this function is not implemented on all searchlights. Focus displays the current focus position with a value of 0-100. A value of 50 should represent the most focused beam with the beam diverging above and below 50. Note that the value will ascend from 0-100 then reset back to 0. Pressing the arrow up button will operate the focus motor.

FAULTS+LIMITS
Displays any faults or limit switch activation relating to the selected lamp. Multiple faults will be displayed sequentially.

LAMP SOFTWARE
Displays the currently selected lamp software version.

LAMP TYPE No
Displays the lamp type number. FBUS Lamp control cards are generic and are programmed to the correct lamp type during lamp assembly. This setting facilitates verification of the lamp type setting.

EXT COMMS DATA
Included to aid external interface development. The display bottom line will show any valid received commands preceded by the lamp number to which the command is sent. The system also indicates data errors.

FBUS SUPPLY
This just indicates the FBUS supply voltage. FBUS operates at 24V. Values above 30 or below 18 indicate something is wrong.

NOTE – The remining menu items can only be selected when communications is set to UDP.

REMOTE ADDRESS (UDP Only)
A diagnostic tool to display the IP address of the last remote system to communicate with the FBUS Interface.

The following menu items will select once the system has read the Ethernet interface parameters.

IP ADDR (UDP Only)
This displays the interface units IP address. To change the IP address press ENT. Note that the system must use static IP addressing.

GATEWAY ADDRESS (UDP Only)
This is a diagnostic tool to display IP address of the gateway if applicable.

EXTERNAL DATA INTERFACE – RECEIVED COMMANDS
External data must send command data packets with between four and seven bytes including the CRC.
The system uses standard 8-bit data transfer with 1 start bit and 1 stop bit. Data is sent least significant bit (LSB) first.
All command packets must start with a sync byte. The sync byte value is 0xFF. The next byte is the lamp address. The lamp address is a value between 0x90 and 0xA8. Lamp 0 address would therefore be sent as 0x90. The lamp address indicates to which lamp on the system the remaining data is to be directed.
The next byte is the command. Some commands have subsequent data bytes. After the command (and data where applicable) a CRC is sent. All commands are detailed below; -

DATA_LAMP_BUTTON (0x0A)
Four-byte command (Sync, Lamp address, command, CRC). Switches the lamp state from on to off or off to on.

DATA_FOCUS BUTTON (0x0B)
Four-byte command (Sync, Lamp address, command, CRC). operates the focus motor momentarily. To keep the focus motor running the command must be sent repeatedly. For systems where the data refresh rate is low see FOCUS_ON Command below.

DATA_MOVE_TO_HOME (0x0C)
Four-byte command (Sync, Lamp address, command, CRC). Lamp automatically moves to the home position. If a home position has not been defined the home position will be straight ahead with the lamp horizontal.

DATA_RECORD (0x0D)
Four-byte command (Sync, Lamp address, command, CRC). The lamp will start recording motion and lamp on / off data when this code is received.

DATA_PLAY (0x0E)
Four-byte command (Sync, Lamp address, command, CRC). The lamp will start playing back a previously recorded sequence when this code is received.

DATA_STORE_HOME (0x 0F)
Four-byte command (Sync, Lamp address, command, CRC). Stores the lamp current pan and tilt position values and will move to these values when the DATA_MOVE_TO_HOME command is issued.

DATA_LAMP2_BUTTON (0x12)
Four-byte command (Sync, Lamp address, command, CRC). Switches the lamp second head state (if fitted) from on to off or off to on.

DATA_FOCUS2 BUTTON (0x13)
Four-byte command (Sync, Lamp address, command, CRC). operates the head 2 focus motor momentarily (if fitted). To keep the focus motor running the command must be sent repeatedly. For systems where the data refresh rate is low see FOCUS_HEAD2_ON Command below.

DATA_PAN_CLOCKWISE (0x14)
Five-byte command (Sync, Lamp address, command, speed, CRC) Pans the lamp clockwise at a speed proportional to the commanded value. The speed value is between 0 and 127. Value 0 stops pan motion and cancels the command. Increasing values make the lamp move progressively faster. Transmitting codes 0xFF 0x90 0x14 0x7F would move lamp 0 full speed clockwise. Note that this command will remain active until cancelled by sending the command with a 0-speed value.

DATA_PAN_ANTICLOCKWISE (0x15)
Five-byte command (Sync, Lamp address, command, speed, CRC) Pans the lamp anticlockwise at a speed proportional to the commanded value. The speed value is between 0 and 127. Value 0 stops pan motion and cancels the command. Increasing values make the lamp move progressively faster. Transmitting codes Hex 0xFF 0x90 0x15 0x7F would move lamp 0 full speed anticlockwise. Note that this command will remain active until cancelled by sending the command with a 0-speed value.

DATA_TILT_DOWN (0x16)
Five-byte command (Sync, Lamp address, command, speed, CRC) Tilts the lamp down at a speed proportional to the commanded value. The speed value is between 0 and 127. Value 0 stops pan motion and cancels the command. Increasing values make the lamp move progressively faster. Transmitting codes Hex 0xFF 0x92 0x16 0x7F would move lamp 2 down at full speed. Note that this command will remain active until cancelled by sending the command with a 0-speed value.

DATA_TILT_UP (0x17)
Five-byte command (Sync, Lamp address, command, speed, CRC) Tilts the lamp up at a speed proportional to the commanded value. The speed value is between 0 and 127. Value 0 stops pan motion and cancels the command. Increasing values make the lamp move progressively faster. Transmitting codes Hex 0XFF 0x92 0x17 0x7F would move lamp 2 up at full speed. Note that this command will remain active until cancelled by sending the command with a 0-speed value.

DATA_MOVE_TO_PAN_POSITION (0x18)
Six-byte command (Sync, Lamp address, command, Pan LSB, Pan MSB, CRC). Commands the selected lamp to move to a specified pan position.
The position value is centred on a value of 2048. Values below 2048 represent negative angles, values above 2048 represent positive values. The resolution is 0.1 degrees.
A value of 2148 would represent + 10.0 degrees. (2148 - 2048 = 100).
A value of 1948 would represent -10.0 degrees (1948 – 2048 = -100).
Sending data 0xFF, 0x90, 0x00, 0x08, 0x17 would transmit a command to move to position 0.0 degrees.

DATA_MOVE_TO_TILT_POSITION (0x19)
Six-byte command (Sync, Lamp address, command, Tilt LSB, Tilt MSB, CRC). Commands the selected lamp to move to a specified tilt position.
The position value is centred on 2048. Values below 2048 represent negative angles, values above 2048 represent positive values. The resolution is 0.1 degrees.
A value of 2148 would represent + 10.0 degrees. (2148 – 2048 = 100).
A value of 1948 would represent -10.0 degrees (1948 – 2048 = -100).
Sending data 0xFF, 0x90, 0x00, 0x08, 0x17 would transmit a command to move to position 0.0 degrees

DATA_LAMP_ON (0x1A)
Four-byte command (Sync, Lamp address, command, CRC). The lamp will switch on when this code is received.

DATA_LAMP_OFF (0x1B)
Four-byte command (Sync, Lamp address, command, CRC). The lamp will switch off when this code is received.

DATA_LAMP_HEAD2_ON (0x1C)
Four-byte command (Sync, Lamp address, command, CRC). If fitted the lamp head 2 will switch on when this code is received.

DATA_LAMP_HEAD2_OFF (0x1D)
Four-byte command (Sync, Lamp address, command, CRC). If fitted the lamp head2 will switch off when this code is received.

DATA_PAN_AND_TILT (0x32)
Five bytes (Sync, Lamp address, Pan command, Tilt command, CRC).
Drives the lamp pan and tilt motors at speeds / directions specified by the command values. The command values are centred on a value of 128 which represents a stop command. For the pan command, values above 128 will cause clockwise movement with the speed increasing as the value increases to a maximum of 0xFE. Values below 128 will cause anticlockwise movement with the speed increasing as the value reduces, maximum speed will be 01. For the tilt command, values above 128 will cause the lamp to tilt up. The speed will increase as the value increases up to a maximum of 0xFE. Values below 128 will cause the lamp to tilt down with the speed increasing as the value reduces to a minimum of 01.
Note that these commands are maintained. Sending a command once will cause motion to start at the specified speed. This will continue until a command is sent with a zero (128) speed value.

DATA_POSITION (0x33)
Seven-bytes (Sync, Lamp address, Pan low, Pan high, Tilt low, Tilt high, CRC).
This commands the selected lamp to move to a given position with both pan and tilt positions specified. The pan and tilt position value format are the same as for the DATA_MOVE_TO_PAN_POSITION command.

DATA_REQUEST_LAMP_STATUS (0x34)
Four-byte command (Sync, Lamp address, command, CRC). When the interface receives this command there is a 10mS delay then the interface will switch to transmit and send 13 bytes as detailed below.

1. Sync (FF)
2. Lamp Address with bit 7 set - range 0x90-0xA8
3. Pan Position LSB (Same format as pan position command above)
4. Pan Position MSB
5. Tilt Position LSB (Same format as tilt position command above)
6. Tilt Position MSB
7. Lamp Status

Bit 0 - Lamp on
Bit 1 - Pan Limit
Bit 2 - Tilt Limit
Bit 3 - Lamp Recording
Bit 4 - Lamp Playing
Bit 5 - Lamp head 2 on
Bit 6 - Lamp moving to home.

8. Focus position - Value between 0 and 100 - Minimum beam width at value 50.

9. Fault Status 1
Bit 0 - Pan motor current high.
Bit 1 - Tilt motor current high.
Bit 2 - Focus motor current high.
Bit 3 - FBUS +24V out current high.
Bit 4 - Heater current high.

10. Fault Status 2
Bit 0 - Limit switch error.
Bit 1 - Datum error.
Bit 2 - Lamp type invalid.
Bit 3 - Supply voltage out of tolerance.

11. Lamp software version.

12. Lamp type No.

13. CRC

DATA_FOCUS_ON (0x35)
Four-byte command (Sync, Lamp address, command, CRC). Sets the focus motor running. Focus will continue to operate until a DATA_FOCUS_OFF command is received. This command is included to allow systems which have a low refresh rate to control the focus motor.

DATA_FOCUS_OFF (0x36)
Four-byte command (Sync, Lamp address, command, CRC). Stops the focus motor. Used to cancel the DATA_FOCUS_ON command. This command is included to allow systems which have a low refresh rate to control the focus motor.

DATA_FOCUS_HEAD2_ON (0x37)
Four-byte command (Sync, Lamp address, command, CRC). Sets the head 2 focus motor running (when fitted). Focus will continue to operate until a DATA_FOCUS_HEAD2_OFF command is received. This command is included to allow systems which have a low refresh rate to control the focus motor.

DATA_FOCUS_HEAD2_OFF (0x38)
Four-byte command (Sync, Lamp address, command, CRC). Stops the head2 focus motor (when fitted). Used to cancel the DATA_FOCUS_HEAD2_ON command. This command is included to allow systems which have a low refresh rate to control the focus motor.

ERROR CONTROL CRC

Error control is implemented with a CRC following each data packet. The CRC is radix to 7 bits giving a value between 0 and 127. The CRC is simply the addition of all packets data values including the address and start byte (0xFF). For example, a command to run lamp 0 focus motor would be 0xFF, 0x90, 0x0B. The addition of these values give 0x19A. The CRC would therefore be this value radix to 7 bits to give a value of 0x1A. This value is sent as the last byte of the packet.

DATA TIMING

Data packets can be sent up to 10 times per second. Each packet starts with value 0xFF. The remaining bytes should follow immediately. The whole packet must be received within 30mS. A packet lasting longer than 30mS will be rejected.
There is no minimum packet send rate.

When the FBUS interface receives the DATA_REQUEST_LAMP_STATUS command there is a 2-30mS delay after which the FBUS interface switches to transmit and outputs 13 data bytes in direct succession. After the last byte has been sent the interface will switch back to receive.

7- Fault Finding

All fault finding must be conducted by a competent person or qualified Electrical Engineer.

Please refer to the following table for the troubleshooting of Xenon lamps.

Fault	Cause	Remedy
■ Wrong Polarity.	■ Lamp incorrectly fitted. ■ Faulty wiring.	■ Anode (large electrode) must always be on top in vertical burning position. ■ Check polarity, transpose connections if necessary.
■ Cap overheated. ■ Cap temperature above 230°C.	■ Faulty contacts. ■ Cooling equipment defective.	■ Check terminals, tighten, or renew. ■ Check cooling equipment and replace if necessary.
■ Arc unsteady.	■ Lamp operated outside current control range. ■ Magnetic stabilisation for horizontal operation defective.	■ Correct current setting. ■ Check magnetic stabilisation.
■ Bulb draws in air.	■ Crack in graded seal caused by overheated cap. ■ Maximum cap temperature 230°C.	■ Check terminals - tighten or renew.
■ Glass erosion on fused quartz bulb.	■ Lamp operated outside current control range. ■ Lamp service life exceeded.	■ Correct current setting. ■ Check meter.
■ Electrodes damaged. ■ Premature blackening.	■ Current ripple too high. ■ Auxiliary mirror incorrectly adjusted.	■ Have power supply inspected. ■ Adjust auxiliary mirror.
■ Asymmetrical blackening of lamp (in horizontal burning position).	■ Lamp operated too long in same position.	■ Turn lamp through 180° after half service life.

Failure of Lamp to Ignite

In the event of the xenon lamp failing to light the following steps should be taken:

1) Check that the mains supply is connected to the input of the PSU. On operating the lamp switch, if the lamp does not light, switch off mains supply and check all fuses.
2) On pressing the lamp switch the lamp still does not ignite, check the searchlight head. On your command get an operator to activate the switch for approximately 10 seconds. During this time listen for any noise (cracking or hissing) coming from within the barrel. If this arcing is heard switch off the supply at the mains. Remove the rear bezel to expose the two supply leads to the xenon lamp. Using a dry cloth wipe these leads to remove any dust, moisture or condensation that may have formed around the inside of the barrel. Replace the rear bezel, ensuring the latches are located, and perform the check again, listening for the cracking. If the lamp still fails to ignite, switch off at the mains and replace the xenon lamp in accordance with the safety procedures within this manual and the manufacturer's information.

Any further tests to be carried out with regards to lamp failure must be conducted by a competent electrical engineer and should not be carried out in an explosive atmosphere.

3) Before a xenon lamp will ignite, the electrically insulated gas between the electrodes must be ionised. This is done by the ignitor which produces a high frequency voltage (up to 32,000 volts or higher). The ignitor is activated by switching the lamp on and a crackling or hissing noise should be heard. The ignitor is housed within the rear of the searchlight barrel. This is a totally encapsulated unit and repair is not advised. If found to be faulty a new ignitor must be fitted.

Failure of Remote Focus Facility

The remote focus mechanism is controlled by a small electric motor situated at the rear of the searchlight barrel. If the focus of the light fails, the following procedure should be adopted:

1) Remove the rear bezel from searchlight barrel and examine focus mechanism. If parts have become loose, tighten fasteners. The mechanism operates on a lever action and this should be checked for correct positioning.
2) If the mechanism is okay, check the supply to the motor. This can be done by simply placing a multi-meter across the motor terminals.
3) If supply is present, this indicates that the motor has failed. Replace the focus motor ensuring that the assembly is correct.
4) If no supply is present, there is a fault in the motor gearbox. This should be examined and rectified accordingly.

Note: If a fault occurs on the motor gearbox, the unit should be returned to Francis Searchlights Limited for fault evaluation and repair.

Back To Top

8 - Maintenance and Servicing

To prolong the service life and performance of your searchlight, the following maintenance guidelines are recommended:

- Maintenance checks should be conducted before every voyage or at least every three months.
- Before checking, disconnect the equipment from the supply.
- Visually inspect the condition of the equipment.
- Any major or minor structural damage should be rectified immediately to reduce sympathetic wear.
- After inspection it may be necessary to clean the inside of the searchlight. The following procedure should be adhered to:
    - Remove the front bezel.
    - Clean the front glass inside and out using a proprietary glass cleaner.
    - Clean the reflector if required.
    - Check the reflector mounting gaskets. If signs of corrosion or damage are evident, replace, as necessary.
    - Ensure that the lampholder is free from corrosion or other damage.
    - Check earth point for conductivity.
- It is advisable to check all seals and gaskets for signs of degradation. Renew if necessary.
- Upon completing all maintenance requirements, the searchlight should be tested for full working order (approximately 20 minutes).

If in any doubt as to the correct servicing procedures to adopt, please contact your distributor/agent or the manufacturer who will be able to advise the best course of action for your product.

Back To Top

9 – General Assembly & Wiring Diagrams

Drawing Number	Description
A7225	FX560RC 3Kw General Assembly
C28427	Wiring Diagram (Controlling 3 Searchlights)
C28206	Joystick Panel Assembly
C28432	Junction Box Assembly
C28257	Power Supply Enclosure Assembly

FIRST USED ON

DO NOT SCALE DRAWING

THIRD ANGLE PROJECTION

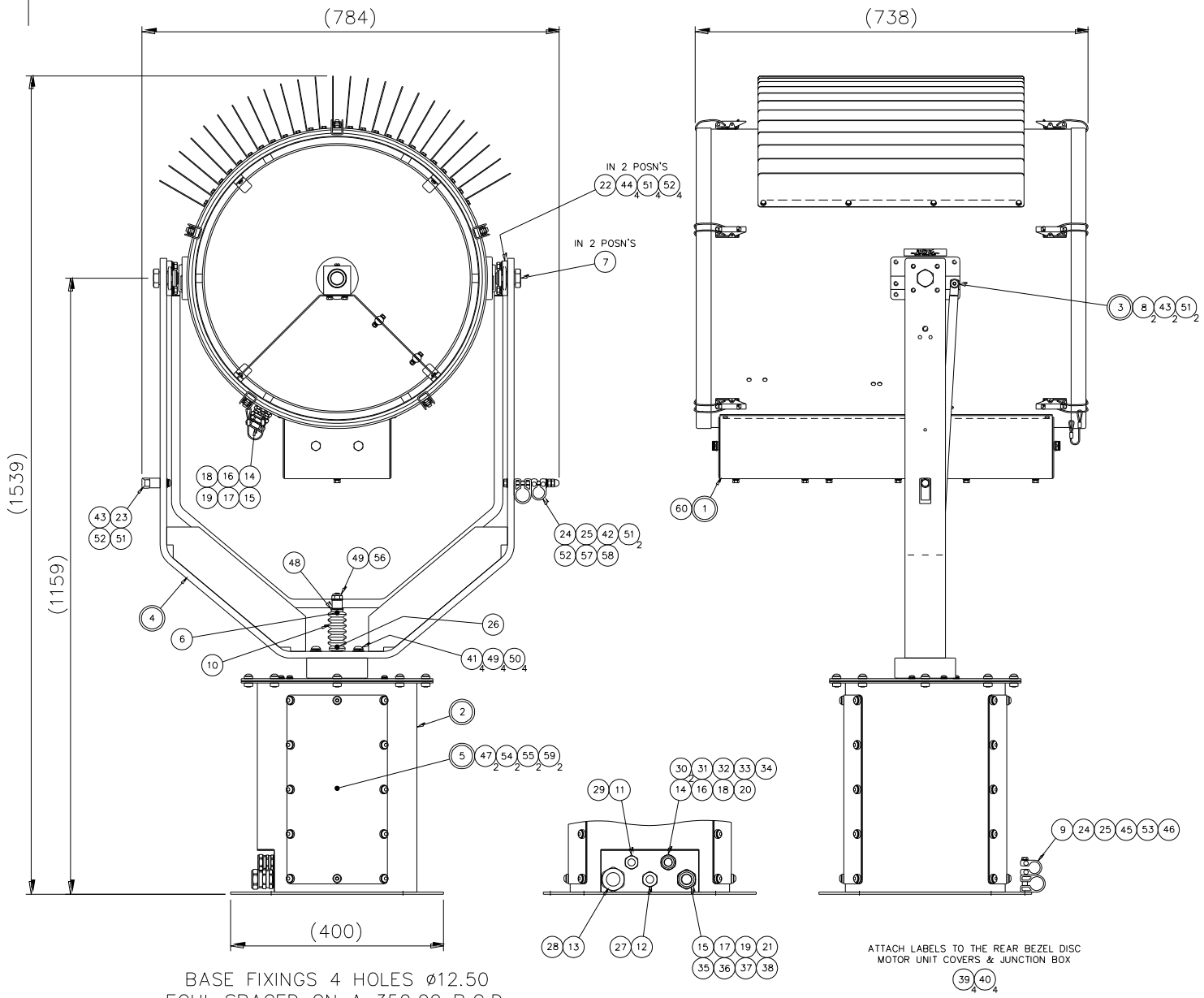

BASE FIXINGS 4 HOLES ø12.50
EQUI-SPACED ON A 350.00 P.C.D.

ITEM	PART No.	DRG No.	DESCRIPTION	QTY
1	C28437	C28437	BARREL ASSY	1
2	C27540	C27540	M10 MOTOR UNIT ASSY	1
3	C26693	C26693	U-PIECE ASSY	1
4	C24483	C24483	CRUTCH SUB ASSY	1
5	C26758	C26758	TERMINAL RAIL ASSY	1
6	C21583	C21583	BELLOWS TOP BUSH	1
7	C21821	C21821	TRUNNION BOLT	2
8	C23331	C23331	U-PIECE BUSH	2
9	C24649	C24649	M25 CABLE CLEAT BUSH	1
10	C20281	C20281	BELLOWS	1
11	C27121		M20 CABLE GLAND	1
12	C12415		M20 CABLE GLAND	1
13	C21877		M32 CABLE GLAND	1
14	C13762		M20 CONDUIT GLAND	2
15	C13768		M25 CONDUIT GLAND	2
16	C22931		M20 GLAND LOCKNUT	2
17	C22930		M25 GLAND LOCKNUT	2
18	C24710		M20 SEALING WASHER	2
19	C24711		M25 SEALING WASHER	2
20	C13751		M20 CONDUIT	3.3M
21	C13761		M25 CONDUIT	3.3M
22	C21823		FLANGE BEARING	2
23	C20943		LIFTING HANDLE	1
24	C24645		M20 CABLE CLEAT	2
25	C24644		M25 CABLE CLEAT	2
26	C21967		'O' RING	1
27	C20341		5 CORE 1.5mm CABLE	4M
28	C24619		4 CORE 16mm CABLE	4M
29	C24827		2 PAIR TWISTED CABLE	4M
30	C13872		1.5mm S/C CABLE RED	2x 5.3M
31	C13873		1.5mm S/C CABLE BLACK	5.3M
32	C15112		1.5mm S/C CABLE G/Y	5.3M
33	C15838		1.5mm S/C CABLE BLUE	5.3M
34	C26799		1.5mm S/C CABLE BROWN	5.3M
35	C14161		6mm S/C CABLE RED	5.3M
36	C14162		6mm S/C CABLE BLACK	5.3M
37	C24620		16mm S/C CABLE RED	5.3M
38	C24621		16mm S/C CABLE BLACK	5.3M
39	C22036		ISOLATE SUPPLY LABEL	4
40	C21464		230V WARNING LABEL	4
41	C08088		M10 x 30 BUTTON HD SCREW	4
42	C20539		M8 x 90 HEX HD SCREW	1
43	C09208		M8 x 30 BUTTON HD SCREW	3
44	C06098		M8 x 25 HEX HD SCREW	8
45	C11965		M6 x 35 HEX HD SCREW	1
46	C10142		M5 x 12 CSK HD SCREW	1
47	C14644		M4 x 8 HEX HD SCREW	2
48	C08370		M12 PLAIN WASHER	1
49	C08091		M10 PLAIN WASHER	5
50	C15313		M10 S/C SPRING WASHER	4
51	C06999		M8 PLAIN WASHER	13
52	C15041		M8 S/C SPRING WASHER	10
53	C06997		M6 PLAIN WASHER	1
54	C04376		M4 PLAIN WASHER	2
55	C08793		M4 S/C SPRING WASHER	2
56	C12355		M10 NYLOC NUT	1
57	C09481		M8 FULL NUT	1
58	C13196		M8 DOME NUT	1
59	C26389		GAS ARRESTOR	2
60	C28537		CAPACITOR	1

ISS No	MODIFICATION DETAILS	DATE & INIT'S
1	AS FIRST DRAWN	12.19 D.S.
2	C27121 WAS C15293 EC1797	2.20 D.S.
3	GAS ARRESTORS & CAPACITOR ADDED (EC1806)	3.20 LW

STANDARD PRACTICE
Deburr all cut/machined edges
Break corners R0.25(Max) U.O.S.

Francis SEARCHLIGHTS

FRANCIS SEARCHLIGHTS LIMITED . UNION ROAD . BOLTON . BL2 2HJ

© 2019

A1 CONT ON SHEET

DRAWN	D.S.	DATE	10.12.19	TOLERANCES	Sand Casting: To ISO 8062 CT10	MATERIAL	FINISH	DESCRIPTION	FX560RC 240V 3KW V/S GA 2017 (IP67)	PART No./DRG No.	SHT
CHECKED		SCALE	1:4	General: ±	Die Casting: To ISO 8062 CT8					A7225	1
ALL DIMENSIONS IN MILLIMETRES				Angular: ±	Hole centres & posns: ±						

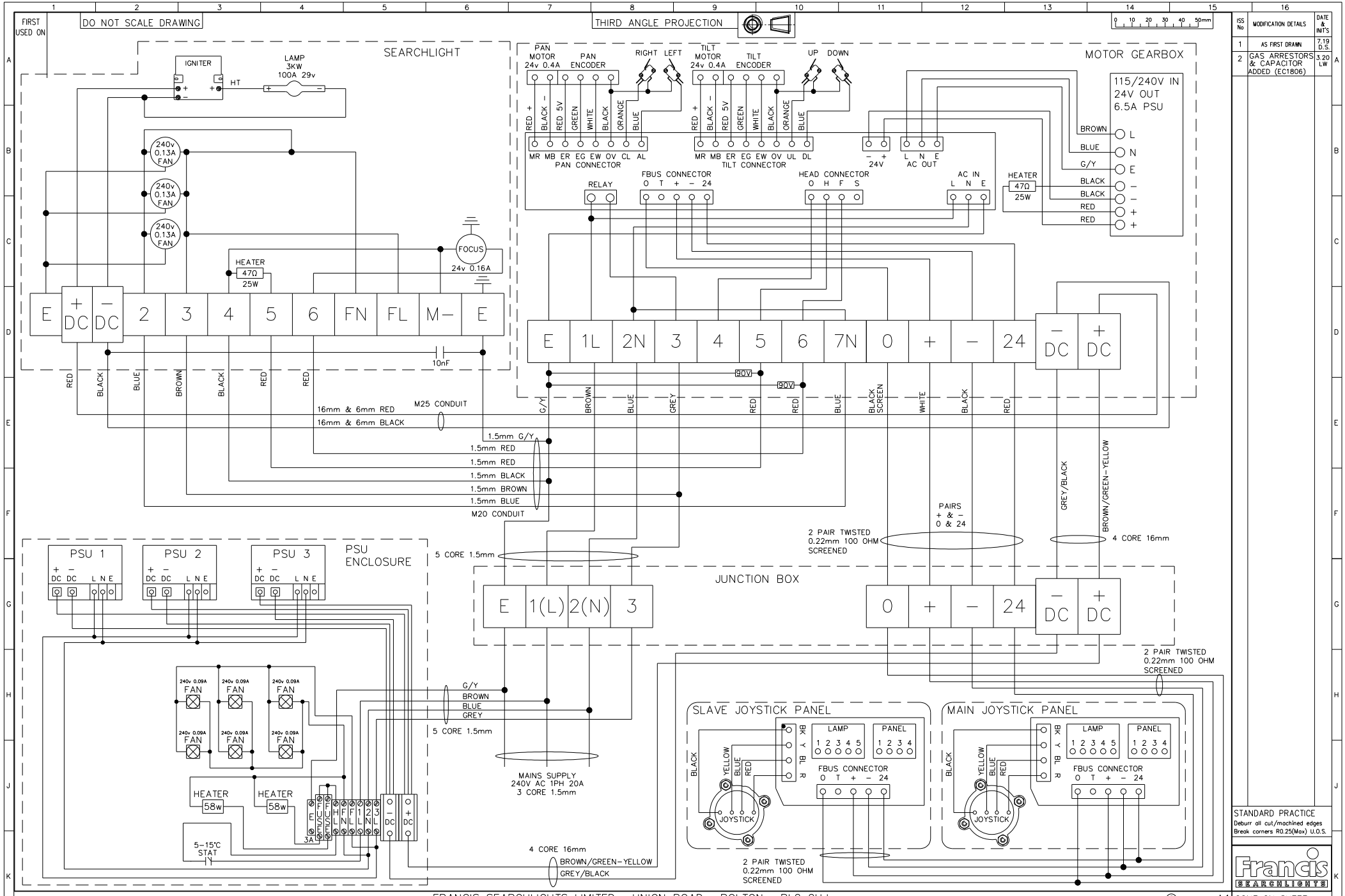

ISS No	MODIFICATION DETAILS	DATE & INIT'S
1	AS FIRST DRAWN	7.19 D.S.
2	GAS ARRESTORS & CAPACITOR ADDED (EC1806)	3.20 LW

STANDARD PRACTICE
Deburr all cut/machined edges
Break corners R0.25(Max) U.O.S.

Francis SEARCHLIGHTS

FRANCIS SEARCHLIGHTS LIMITED . UNION ROAD . BOLTON . BL2 2HJ

© 2019

A1 CONT ON SHEET

DRAWN	D.S.	DATE	5.12.19	TOLERANCES	Sand Casting: To ISO 8062 CT10	MATERIAL	FINISH	DESCRIPTION	PART No./DRG No.	SHT
CHECKED		SCALE		General: ±	Die Casting: To ISO 8062 CT8			WIRING DIAGRAM XENON RANGE 3KW V/S 2017 (IP67)	C28427	1
ALL DIMENSIONS IN MILLIMETRES				Angular: ±	Hole centres & posns: ±					

FIRST USED ON

DO NOT SCALE DRAWING

THIRD ANGLE PROJECTION

0 10 20 30 40 50mm

ISS No	MODIFICATION DETAILS	DATE & INIT'S
1	AS FIRST DRAWN	5.19 D.S.

ITEM	PART No.	DRG No.	DESCRIPTION	QTY
1	C28205	C28205	CONTROL PANEL	1
2	C28180	C28180	CONTROL PANEL BACKING PLATE	1
3	C28181	C28181	JOYSTICK BACK PLATE	1
4	C28182	C28182	PCB PILLAR	4
5	C28130		DUAL CONTROL JOYSTICK PANEL BOARD	1
6	C28151		ILLUMINATED PUSHBUTTON	7
7	C28150		CLEAR PLASTIC LENS	7
8	C28149		MARKING PLATE	7
9	C26537		JOYSTICK	1
10	C27435		5 WAY CONNECTOR	1

ITEM	PART No.	DRG No.	DESCRIPTION	QTY
11	C20526		M4 x 25 CSK HD SCREW	4
12	C28154		M2.5 x 16 CSK HD SCREW	4
13	C04376		M4 PLAIN WASHER	4
14	C08793		M4 S/C SPRING WASHER	4
15	C10745		M2.5 PLAIN WASHER	4
16	C22371		M2.5 S/C SPRING WASHER	4
17	C06266		M4 FULL NUT	4
18	C10744		M2.5 FULL NUT	4
19	C12039		CLEAR RTV	A/R
20				

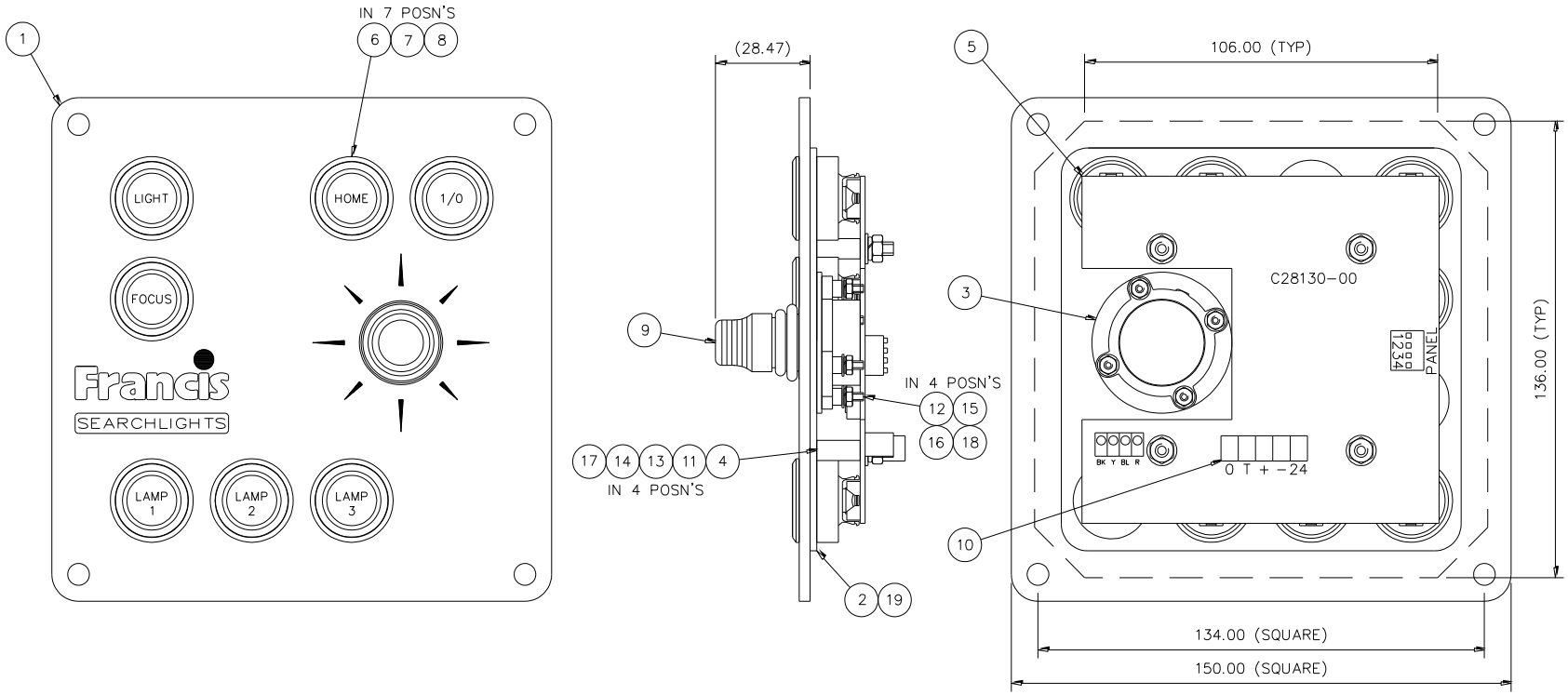

STANDARD PRACTICE
Deburr all cut/machined edges
Break corners R0.25(Max) U.O.S.

Francis SEARCHLIGHTS

FRANCIS SEARCHLIGHTS LIMITED . UNION ROAD . BOLTON . BL2 2HJ

©2019 A2

CONT ON SHEET

DRAWN	D.S.	DATE	5.19	TOLERANCES	MATERIAL	FINISH	DESCRIPTION	PART No./DRG No.	SHT
CHECKED		SCALE	1:1	General: ±			CONTROL PANEL ASSY (3 S/L)	C28206	1
ALL DIMENSIONS IN MILLIMETRES				Angular: ±					

Sand Casting: To ISO 8062 CT10
Die Casting: To ISO 8062 CT8
Hole centres & posns: ±

FIRST USED ON
FX560RC 3KW A7225

DO NOT SCALE DRAWING

THIRD ANGLE PROJECTION

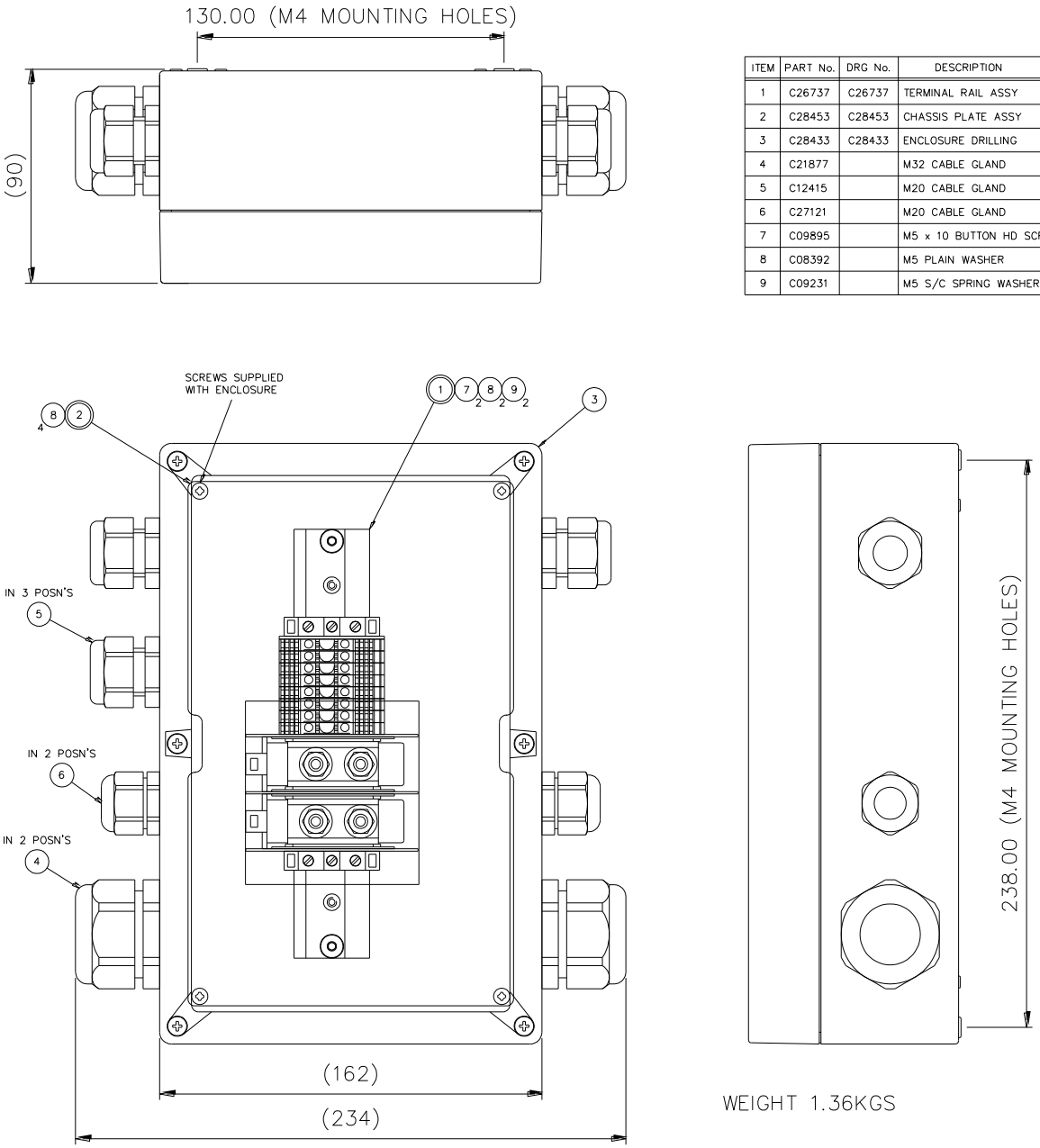

ITEM	PART No.	DRG No.	DESCRIPTION	QTY
1	C26737	C26737	TERMINAL RAIL ASSY	1
2	C28453	C28453	CHASSIS PLATE ASSY	1
3	C28433	C28433	ENCLOSURE DRILLING	1
4	C21877		M32 CABLE GLAND	2
5	C12415		M20 CABLE GLAND	3
6	C27121		M20 CABLE GLAND	2
7	C09895		M5 x 10 BUTTON HD SCREW	2
8	C08392		M5 PLAIN WASHER	2
9	C09231		M5 S/C SPRING WASHER	2

WEIGHT 1.36KGS

ISS No	MODIFICATION DETAILS	DATE & INIT'S
1	AS FIRST DRAWN	12.19 D.S.
2	C27121 WAS C15293 EC1797	2.20 D.S.

STANDARD PRACTICE
Deburr all cut/machined edges
Break corners R0.25(Max) U.O.S.

Francis SEARCHLIGHTS

FRANCIS SEARCHLIGHTS LIMITED . UNION ROAD . BOLTON . BL2 2HJ

©2019

A1 CONT ON SHEET

DRAWN	D.S.	DATE	11.12.19	TOLERANCES	Sand Casting: To ISO 8062 CT10	MATERIAL	FINISH	DESCRIPTION	PART No./DRG No.	SHT
CHECKED		SCALE	1:1	General: ±	Die Casting: To ISO 8062 CT8			JUNCTION BOX ASSY 3KW (IP67)	C28432	1
ALL DIMENSIONS IN MILLIMETRES				Angular: ±	Hole centres & posns: ±					

FIRST USED ON
FX560RC 3KW A7174

DO NOT SCALE DRAWING

THIRD ANGLE PROJECTION

ITEM	PART No.	DRG No.	DESCRIPTION	115V QTY	240V QTY
1	C28261	C28261	CHASSIS PLATE SUB ASSY	1	1
2	C28259	C28259	ENCLOSURE DRILLING	1	1
3	C11351	X2849	DIN RAIL	1	1
4	C28263	C28263	PSU PLATE	3	3
5	C28264		1KW XENON PSU	3	3
6					
7	C23277		HEATER	2	2
8	C24889		THERMAL SWITCH	1	1
9	C16931		FAN 115V	6	
9	C16930		FAN 240V		6
10	C25013		FAN COVER	8	8
11	C14379		EARTH TERMINAL	1	1
12	C27209		TERMINAL FUSE END COVER	1	1
13	C24118		3A FUSE	2	2
14	C27208		TERMINAL FUSE	2	2
15	C14139		END COVER	1	1
16	C15099		TERMINAL	6	6
17	C15411		TERMINAL MARKERS	12	12
18	C11175		H/C SPACER	3	3
19	C10861		H/C TERMINAL	2	2
20	C10469		H/C COVER	1	1
21	C21877		M32 CABLE GLAND	1	1
22	C12415		M20 CABLE GLAND	1	1
23	C15828		RED SHROUDED CRIMP	2	2
24	C09299		M4 RED EYELET	3	3
25	C22701		M6 YELLOW EYELET	6	6
26	C02185		M5 YELLOW EYELET	6	6
27					
28	C27962		M4 x 10 PILLAR	4	4
29	C22078		115V WARNING LABEL	1	
29	C21464		240V WARNING LABEL		1
30	C22036		ISOLATE SUPPLY LABEL	1	1
31	C04900		FRANCIS EXTERIOR LABEL	1	1
32	C14161		6mm S/C SILICONE CABLE RED	A/R	A/R
33	C14162		6mm S/C SILICONE CABLE BLACK	A/R	A/R
34	C26799		1.5mm S/C SILICONE CABLE BROWN	A/R	A/R
35	C15838		1.5mm S/C SILICONE CABLE BLUE	A/R	A/R
36	C15112		1.5mm S/C SILICONE CABLE G/Y	A/R	A/R
37	C13351		M5 x 10 HEX HD SCREW	8	8
38	C10120		M4 x 20 SKT CSK HD SCREW	24	24
39	C06981		M4 x 16 SKT CSK HD SCREW	14	14
40	C26955		M4 x 10 HEX HD SCREW	6	6
41	C23813		M4 x 8 BUTTON HD SCREW	7	7
42					
43	C14502		M3 x 6 BUTTON HD SCREW	2	2
44	C08392		M5 PLAIN WASHER	8	8
45	C09231		M5 S/C SPRING WASHER	8	8
46	C04376		M4 PLAIN WASHER	44	44
47	C08793		M4 S/C SPRING WASHER	51	51
48	C20637		M4 x 12 O/D WASHER	4	4
49					
50	C10747		M3 S/C SPRING WASHER	2	2
51	C06266		M4 FULL NUT	38	38

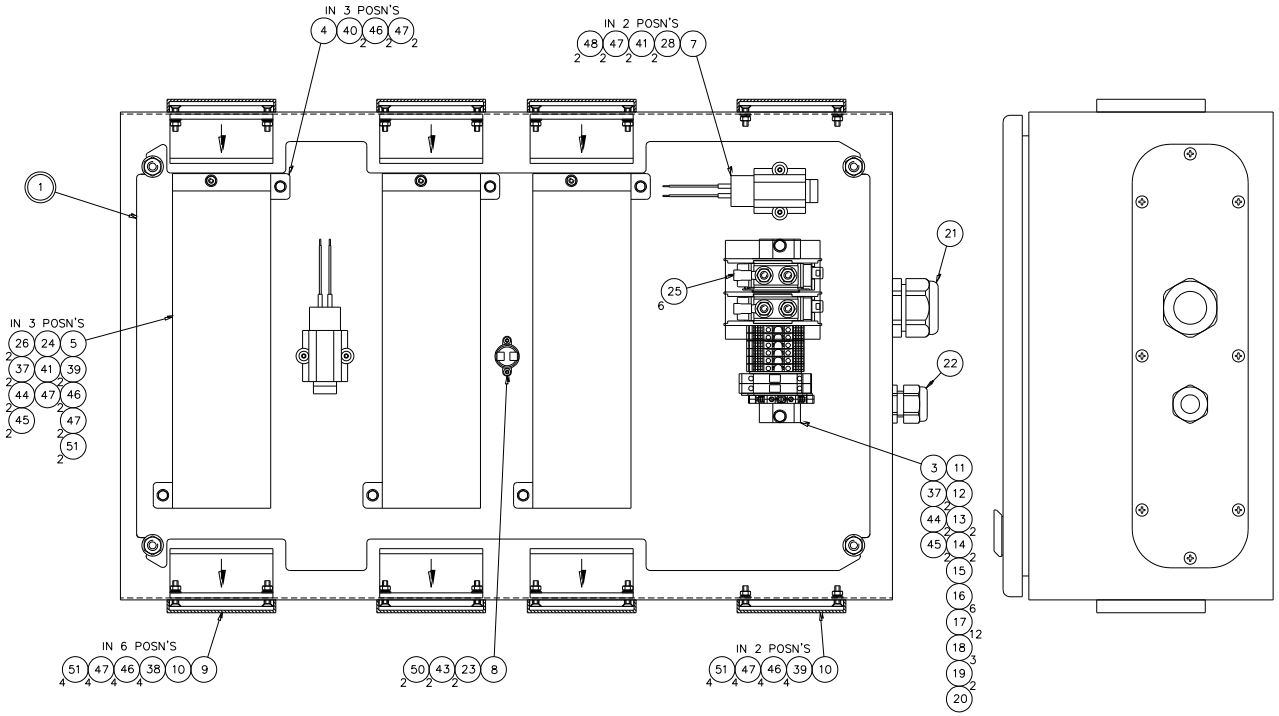

C28257 3KW 240V XENON POWER SUPPLY ASSEMBLY (IP56)
C28258 3KW 115V XENON POWER SUPPLY ASSEMBLY (IP56)

USE ITEMS BELOW FOR WIRING
SEE WIRING DIAGRAM FOR DETAILS
32 33 34 35 36

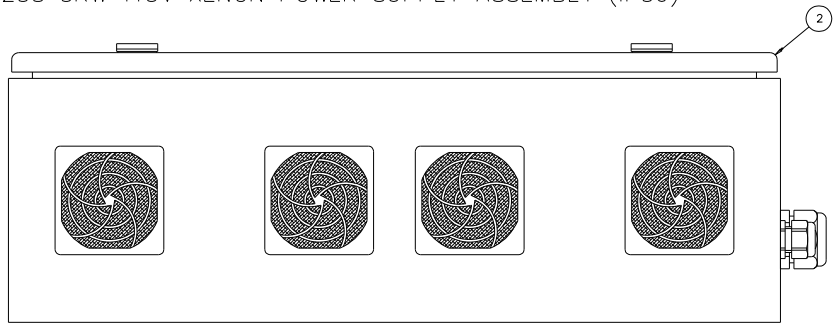

ENCLOSURE BASE FIXINGS
560 x 340 M8 FIXINGS
WEIGHT 24KGS

ISS No	MODIFICATION DETAILS	DATE & INIT'S
1	AS FIRST DRAWN	7.19 D.S.

STANDARD PRACTICE
Deburr all cut/machined edges
Break corners R0.25(Max) U.O.S.

Francis SEARCHLIGHTS

FRANCIS SEARCHLIGHTS LIMITED . UNION ROAD . BOLTON . BL2 2HJ

© 2019

A1 CONT ON SHEET 2

DRAWN	D.S.	DATE	25.7.19	TOLERANCES	Sand Casting: To ISO 8062 CT10	MATERIAL	FINISH	DESCRIPTION	PART No./DRG No.	SHT
CHECKED		SCALE	1:2	General: ±	Die Casting: To ISO 8062 CT8			3KW XENON POWER SUPPLY ASSEMBLY	C28257	1
ALL DIMENSIONS IN MILLIMETRES				Angular: ±	Hole centres & posns: ±					

FIRST USED ON
FX56ORC 3KW A7174

DO NOT SCALE DRAWING

THIRD ANGLE PROJECTION

ITEM	PART No.	DRG No.	DESCRIPTION	115V QTY	240V QTY
1	C28261	C28261	CHASSIS PLATE SUB ASSY	1	1
2	C28259	C28259	ENCLOSURE DRILLING	1	1
3	C11351	X2849	DIN RAIL	1	1
4	C28263	C28263	PSU PLATE	3	3
5	C28264		1KW XENON PSU	3	3
6					
7	C23277		HEATER	2	2
8	C24889		THERMAL SWITCH	1	1
9	C16931		FAN 115V	6	
9	C16930		FAN 240V		6
10	C25013		FAN COVER	8	8
11	C14379		EARTH TERMINAL	1	1
12	C27209		TERMINAL FUSE END COVER	1	1
13	C24118		3A FUSE	2	2
14	C27208		TERMINAL FUSE	2	2
15	C14139		END COVER	1	1
16	C15099		TERMINAL	6	6
17	C15411		TERMINAL MARKERS	12	12
18	C11175		H/C SPACER	3	3
19	C10861		H/C TERMINAL	2	2
20	C10469		H/C COVER	1	1
21	C21877		M32 CABLE GLAND	1	1
22	C12415		M20 CABLE GLAND	1	1
23	C15828		RED SHROUDED CRIMP	2	2
24	C09299		M4 RED EYELET	3	3
25	C22701		M6 YELLOW EYELET	6	6
26	C02185		M5 YELLOW EYELET	6	6
27					
28	C27962		M4 x 10 PILLAR	4	4
29	C22078		115V WARNING LABEL	1	
29	C21464		240V WARNING LABEL		1
30	C22036		ISOLATE SUPPLY LABEL	1	1
31	C04900		FRANCIS EXTERIOR LABEL	1	1
32	C14161		6mm S/C SILICONE CABLE RED	A/R	A/R
33	C14162		6mm S/C SILICONE CABLE BLACK	A/R	A/R
34	C26799		1.5mm S/C SILICONE CABLE BROWN	A/R	A/R
35	C15838		1.5mm S/C SILICONE CABLE BLUE	A/R	A/R
36	C15112		1.5mm S/C SILICONE CABLE G/Y	A/R	A/R
37	C13351		M5 x 10 HEX HD SCREW	8	8
38	C10120		M4 x 20 SKT CSK HD SCREW	24	24
39	C06981		M4 x 16 SKT CSK HD SCREW	14	14
40	C26955		M4 x 10 HEX HD SCREW	6	6
41	C23813		M4 x 8 BUTTON HD SCREW	7	7
42					
43	C14502		M3 x 6 BUTTON HD SCREW	2	2
44	C08392		M5 PLAIN WASHER	8	8
45	C09231		M5 S/C SPRING WASHER	8	8
46	C04376		M4 PLAIN WASHER	44	44
47	C08793		M4 S/C SPRING WASHER	51	51
48	C20637		M4 x 12 O/D WASHER	4	4
49					
50	C10747		M3 S/C SPRING WASHER	2	2
51	C06266		M4 FULL NUT	38	38

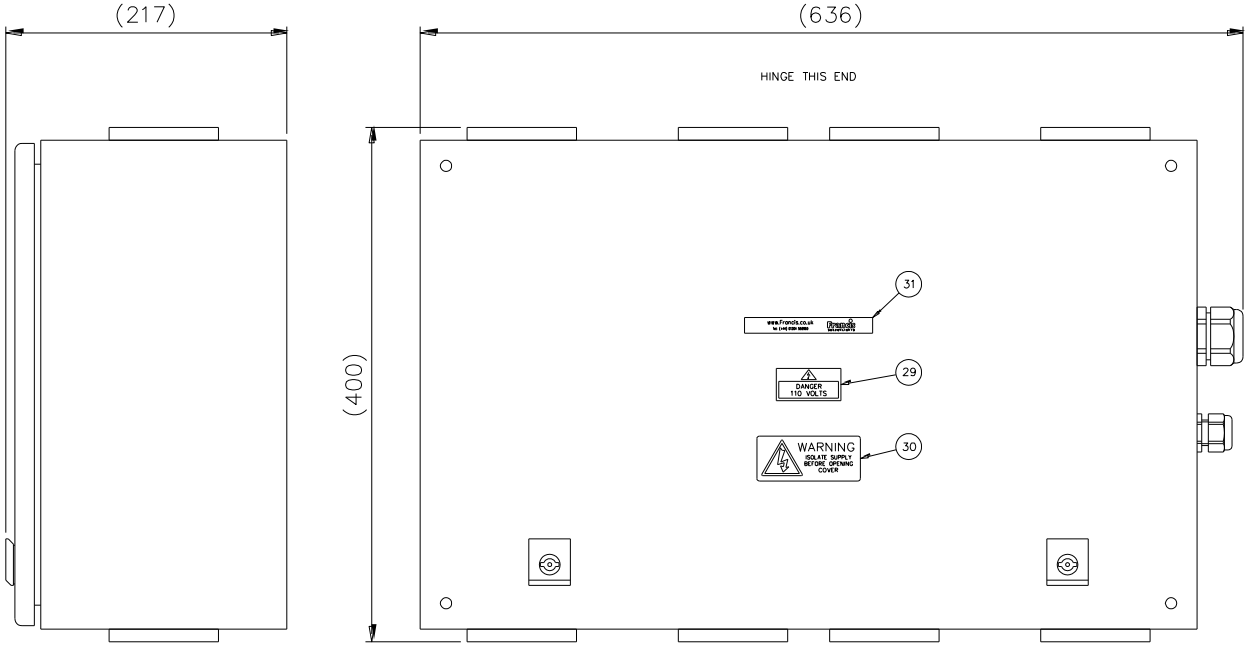

C28257 3KW 240V XENON POWER SUPPLY ASSEMBLY (IP56)
C28258 3KW 115V XENON POWER SUPPLY ASSEMBLY (IP56)

ENCLOSURE BASE FIXINGS
560 x 340 M8 FIXINGS
WEIGHT 24KGS

ISS No	MODIFICATION DETAILS	DATE & INIT'S
1	AS FIRST DRAWN	7.19 D.S.

STANDARD PRACTICE
Deburr all cut/machined edges
Break corners R0.25(Max) U.O.S.

Francis SEARCHLIGHTS

FRANCIS SEARCHLIGHTS LIMITED . UNION ROAD . BOLTON . BL2 2HJ

© 2019

A1 CONT ON SHEET

DRAWN	D.S.	DATE	25.7.19	TOLERANCES	Sand Casting: To ISO 8062 CT10	MATERIAL	FINISH	DESCRIPTION	PART No./DRG No.	SHT
CHECKED		SCALE	1:2	General: ±	Die Casting: To ISO 8062 CT8			3KW XENON POWER SUPPLY ASSEMBLY	C28257	2
ALL DIMENSIONS IN MILLIMETRES				Angular: ±	Hole centres & posns: ±					

10 - Spare Parts List

The following spare parts can be ordered directly from the manufacturer:

Searchlight Spares

Part Number	Description
C28264-00	Power Supply Unit
C24889-00	PSU Thermal Switch
C23277-01	PSU Heater
C16930-01	PSU Fan
C28009-00	Ignitor
C27288-01	Searchlight Heater
C28450-00	Searchlight Fan
C22268-01	Breather Assembly
D24177	3Kw Xenon Lamp
C20881-00	Front Glass
C20569-00	Front/Rear Bezel Gasket
C24706-01	Focus Motor
C15459-00	Bearing
C06779-00	Reflector
C28361-00	Ultraviolet Glass
C28417-00	Insulation Disc
C20281-00	Bellows

Motor Gearbox Spares

C27288-01	Heater
C27308-01	Pan Motor Sub Assembly
C27157-00	Tilt Motor
C22380-00	Micro switch no lever
C22382-00	Micro switch with lever
C27556-00	24v Power Supply Unit
C27187-01	Speed Controller PCB
C22381-00	Pedestal Top Sealing Gasket
C26441-00	Pedestal Cover Gasket

Joystick Panel Spares

C26537-00	Joystick
C28130-00	Dual Control Joystick Panel Board

To prolong the life and performance of your product, we recommend that you only specify Francis Searchlights spare parts. This will ensure that any warranties on your equipment will not be invalidated.
When ordering spare parts please contact the Sales Department at Francis Searchlights Limited. Please always quote searchlight model and serial number. This will enable a fast response to your spares' requirements.

Back To Top